Hi-Force HYDRAULIC TOOLS	HPF100 SERIES WORKSHOP FLOOR PRESS.	SERIAL NUMBERS UP TO BS8411	SPARE PARTS LIST NO. HPF100P1

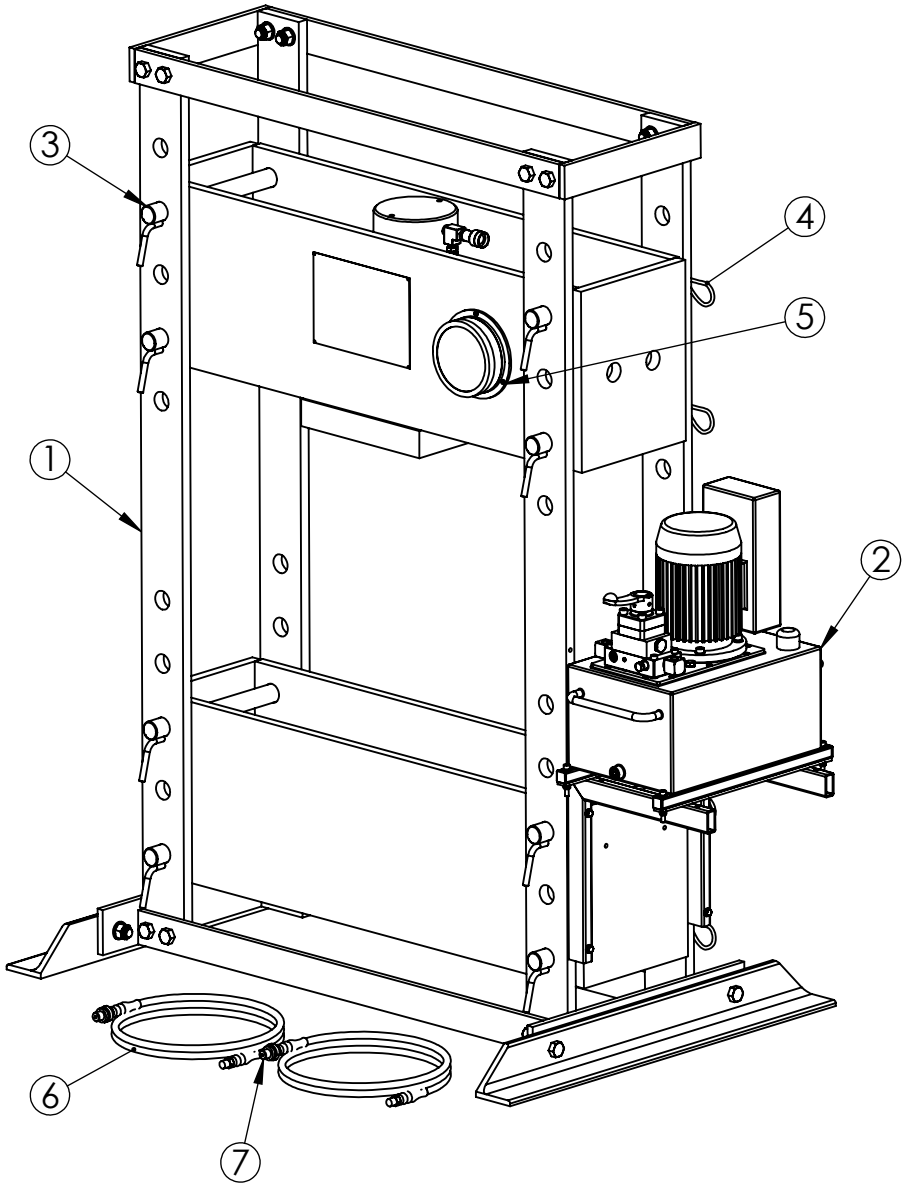

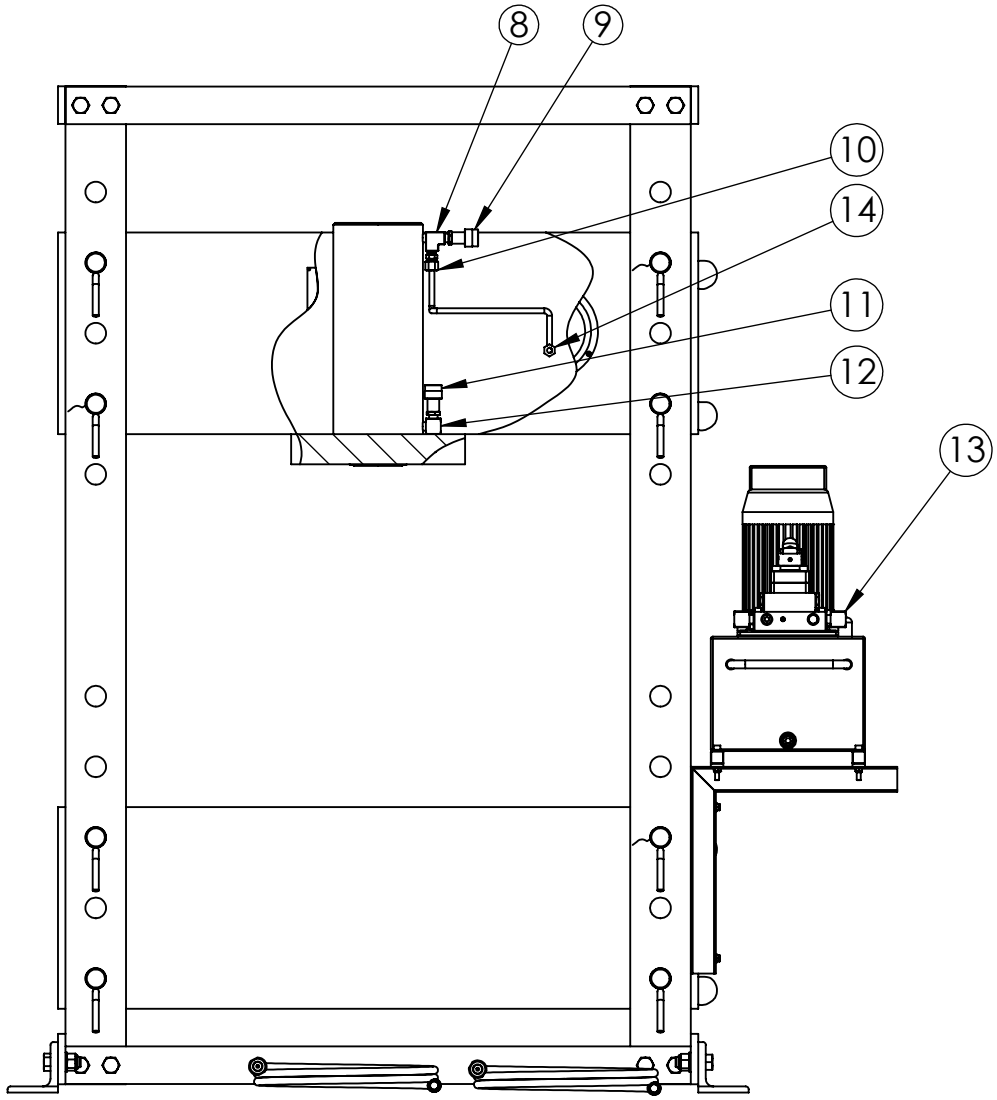

IMPORTANT

WHEN ORDERING SPARES YOU MUST STATE THE FULL PART NUMBER AND THE PRODUCT SERIAL NUMBER - FROM THE LABEL

TO PROTECT YOUR WARRANTY ALWAYS USE GENUINE HI-FORCE PARTS.

www.hi-force.com

Hi-Force HYDRAULIC TOOLS	HPF100 SERIES WORKSHOP FLOOR PRESS.	SERIAL NUMBERS UP TO BS8411	SPARE PARTS LIST NO. HPF100P1

ITEM NO.	HPF10020	HPF10030	HPF10041	HPF10042	HPF10044
1	PAA100HM001	PAA100HM001	PAA100HM001	PAA100HM001	PAA100HM001
2	HP235D	HAP21042	HEP207421	HEP207422	HEP207424
3	PLC100EU001	PLC100EU001	PLC100EU001	PLC100EU001	PLC100EU001
4	STC040RA001	STC040RA001	STC040RA001	STC040RA001	STC040RA001
5	HPG-100T	HPG-100T	HPG-100T	HPG-100T	HPG-100T
6	HH2	HH2	HH2	HH2	HH2
7	CM1	CM1	CM1	CM1	CM1
8	HF31	HF31	HF31	HF31	HF31
9	CF1	CF1	CF1	CF1	CF1
10	FPC010YN001	FPC010YN001	FPC010YN001	FPC010YN001	FPC010YN001
11	CF1	CF1	CF1	CF1	CF1
12	HF16	HF16	HF16	HF16	HF16
13	HF16	HF16	HF16	HF16	HF16
14	FPC006YN001	FPC006YN001	FPC006YN001	FPC006YN001	FPC006YN001

IMPORTANT

WHEN ORDERING SPARES YOU MUST STATE THE FULL PART NUMBER AND THE PRODUCT SERIAL NUMBER - FROM THE LABEL
TO PROTECT YOUR WARRANTY ALWAYS USE GENUINE HI-FORCE PARTS.

Hi-Force HYDRAULIC TOOLS

DOUBLE ACTING CYLINDER HDA10013

SERIAL NUMBERS
UP TO BS8411

SPARE PARTS LIST NO.
HDA10013P1

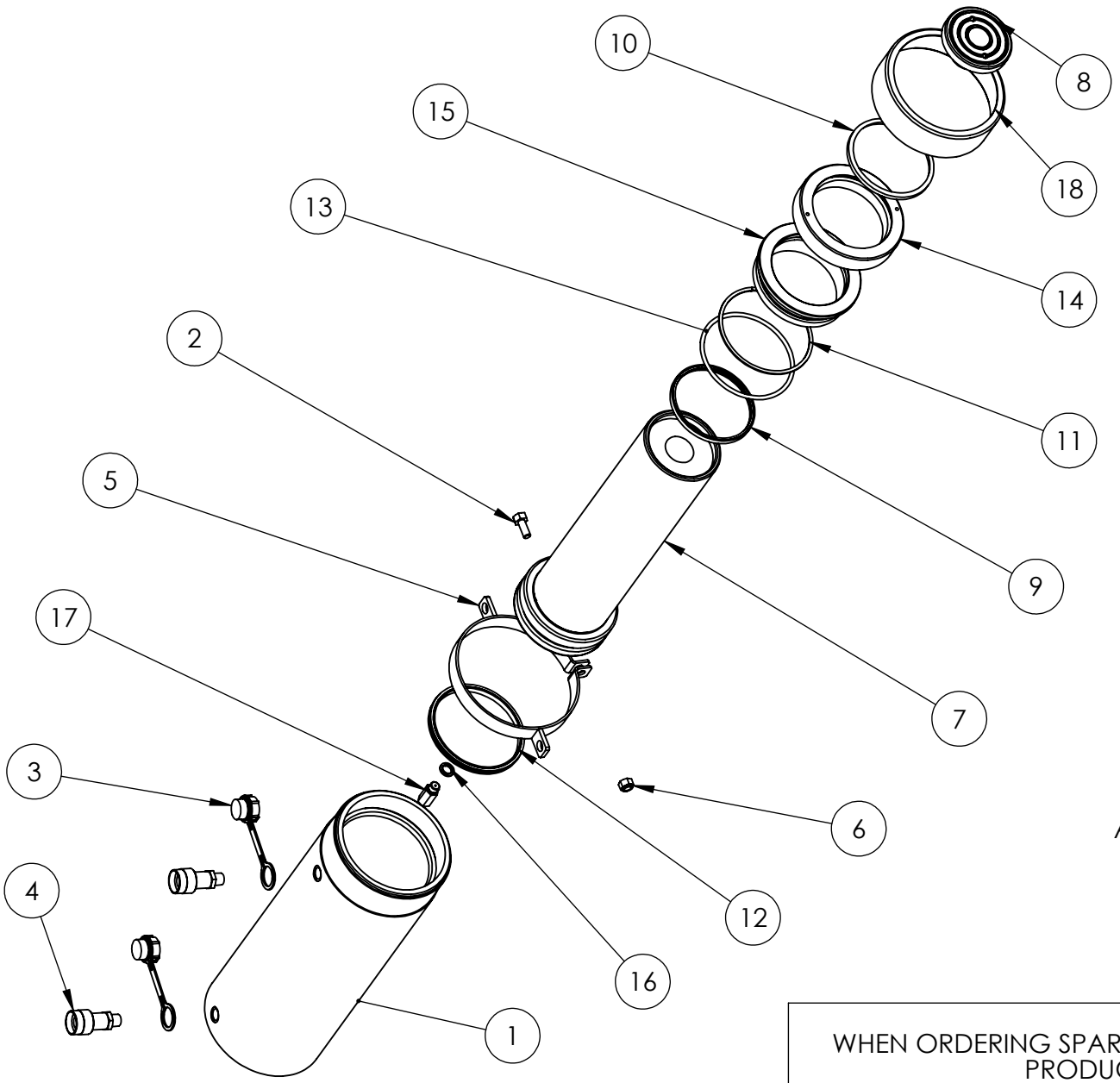

ITEM NO.	PART NUMBER	DESCRIPTION	QTY.
1	CBC140AN003	CYLINDER	1
2	BLC010LB025	BOLT	1
3	BPC030PP001	DUST COVER	2
4	CF1	COUPLER	2
5	FLC178LA002	LIFTING RING	1
6	NUC010LC000	NUT	1
7	PRC140VN002	PISTON	1
8	SAC045MT001	SADDLE	1
9	X	ROD SEAL	1
10	X	WIPER	1
11	X	BACK UP RING	1
12	X	PISTON SEAL	1
13	X	O - RING	1
14	SRC114WN001	STOP RING	1
15	SSC140EA001	SEAL RETAINER	1
16	X	DOWTY WASHER	1
17	VRA700AF002	RELIEF VALVE	1
18	PTP175TP100	THREAD PROTECTOR	1

ALL ITEMS MARKED 'X' SUPPLIED IN KIT HDA100TP1-K ONLY.

IMPORTANT

WHEN ORDERING SPARES YOU MUST STATE THE FULL PART NUMBER AND THE PRODUCT SERIAL NUMBER - FROM THE LABEL
TO PROTECT YOUR WARRANTY ALWAYS USE GENUINE HI-FORCE PARTS.

www.hi-force.com

Hi-Force HYDRAULIC TOOLS	HEP2 ELECTRIC DRIVEN PUMP.	SERIAL NUMBERS UP TO BS8411	SPARE PARTS LIST NO. HEP2P1

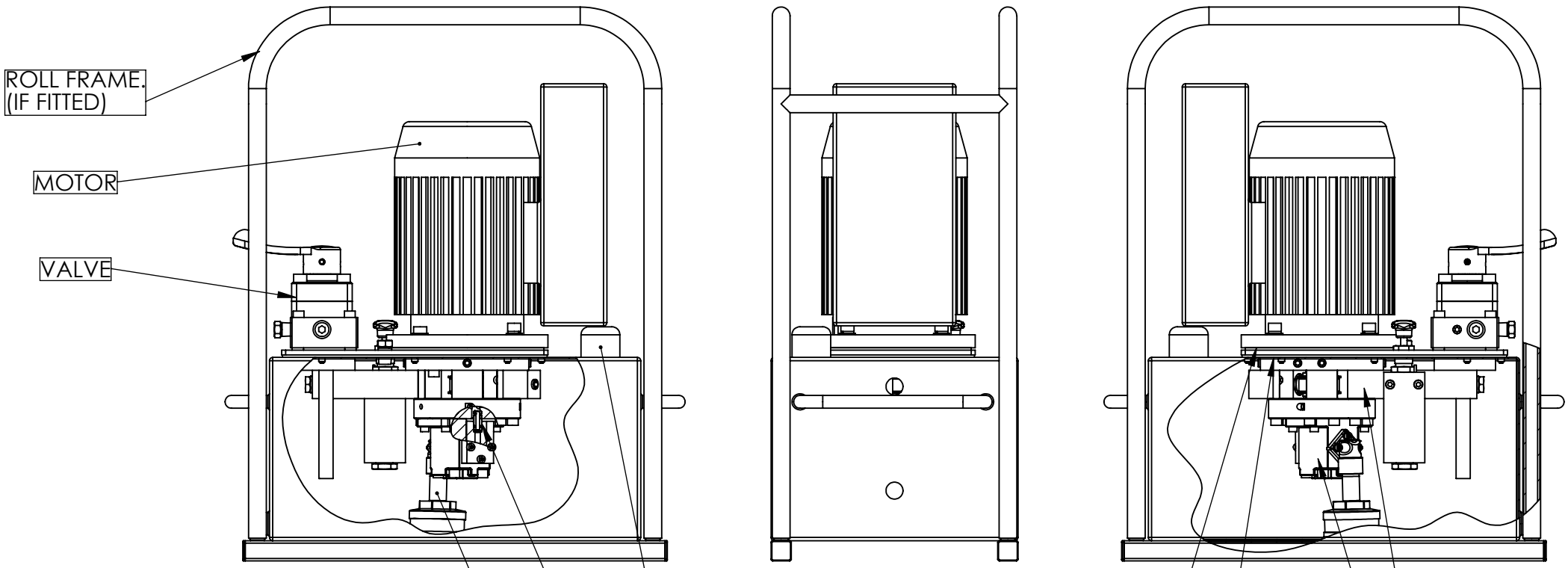

VALVE VARIATIONS.

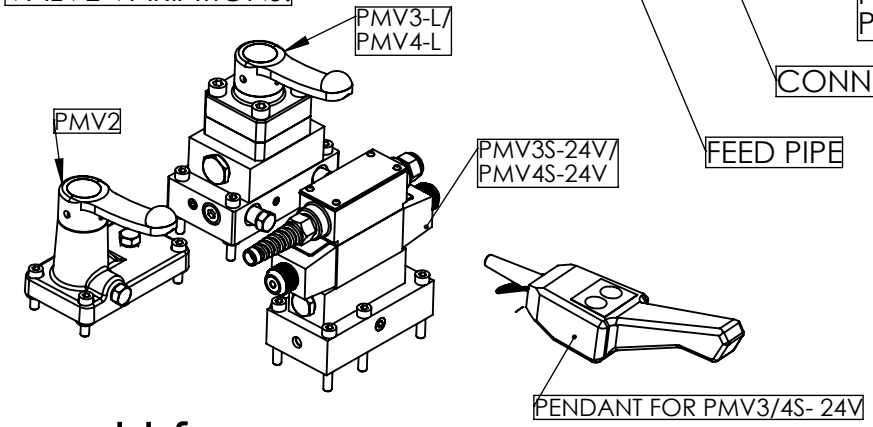

IMPORTANT

WHEN ORDERING SPARES YOU MUST STATE THE FULL PART NUMBER AND THE PRODUCT SERIAL NUMBER - FROM THE LABEL

TO PROTECT YOUR WARRANTY ALWAYS USE GENUINE HI-FORCE PARTS.

www.hi-force.com

Hi-Force HYDRAULIC TOOLS	VALVE ASSEMBLY 4 WAY PMV4	SERIAL NUMBERS UP TO BS8411	SPARE PARTS LIST NO. PMV4P1

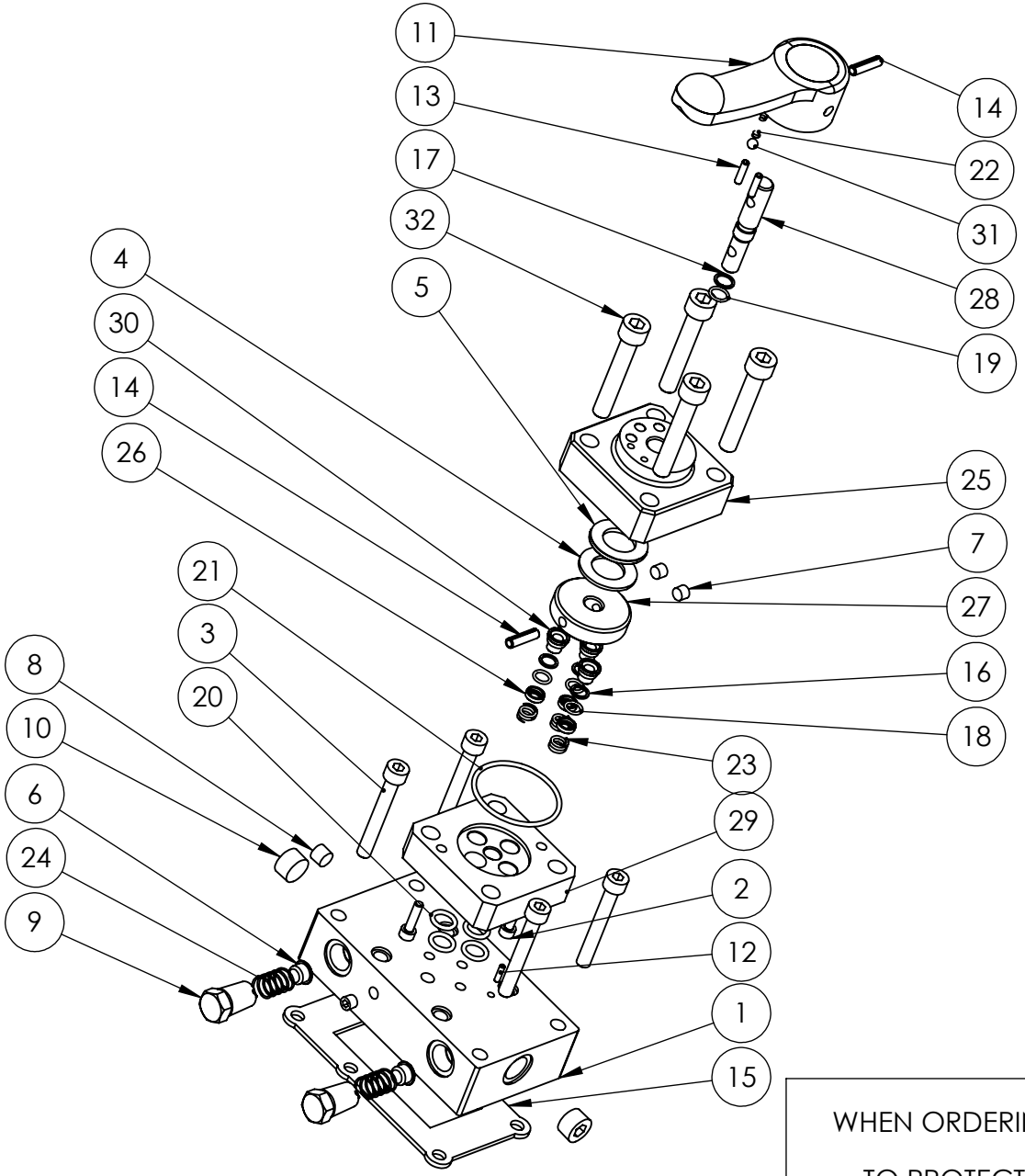

ITEM NO.	PART NUMBER	DESCRIPTION	QTY.
1	VFC010BF007	VALVE MOUNTING BLOCK	1
2	BLC005HU020	CAP HD SCREW	2
3	BLC008KC060	CAP HD SCREW	4
4	BSC035NA001	NEEDLE BEARING	1
5	BSC035NA002	HOUSING WASHER	1
6	FFC011MG001	LAST CHANCE FILTER	2
7	FPC002PN001	PLUG	3
8	FPC003PN001	PLUG	1
9	FPC010PN001	3/8 NPT BLANKING PLUG	2
10	FPC010PN002	3/8 X 7/8 IN. NPT SOCKET PLUG	2
11	HLC012LP002	HANDLE	1
12	PCC003RB006	SPRING PIN	1
13	PCC004RC001	SPRING PIN	2
14	PCC006RD000	SPRING PIN	2
15	X	GASKET	1
16	X	BACK UP RING	3
17	X	BACK UP RING	1
18	X	O - RING	3
19	X	O - RING	1
20	X	O - RING	4
21	X	O - RING	1
22	SPC005CA001	SPRING	1
23	SPC010CA001	SPRING	3
24	SPC014LC001	COMPRESSION SPRING FOR FILTER	2
25	VFC000BD003	VALVE BODY	1
26	VFC000SC001	SHEAR SEAL COLLAR	3
27	VFC000SQ002	VALVE ROTOR	1
28	VFC000SR002	SPINDLE	1
29	VFC000ST001	SHEAR SEAL PLATE	1
30	VFC000SU001	SHEAR SEAL	3
31	X	6 mm BALL	1
32	BLC010LC060	CAP HD SCREW	4

ALL PARTS MARKED 'X' SUPPLIED IN KIT PMV4TP1-K ONLY

IMPORTANT

WHEN ORDERING SPARES YOU MUST STATE THE FULL PART NUMBER AND THE PRODUCT SERIAL NUMBER - FROM THE LABEL
TO PROTECT YOUR WARRANTY ALWAYS USE GENUINE HI-FORCE PARTS.

Hi-Force HYDRAULIC TOOLS

VALVE ASSEMBLY 4 WAY PMV4S-24V

SERIAL NUMBERS
UP TO BS8411

SPARE PARTS LIST NO.
PMV4S-24VP1

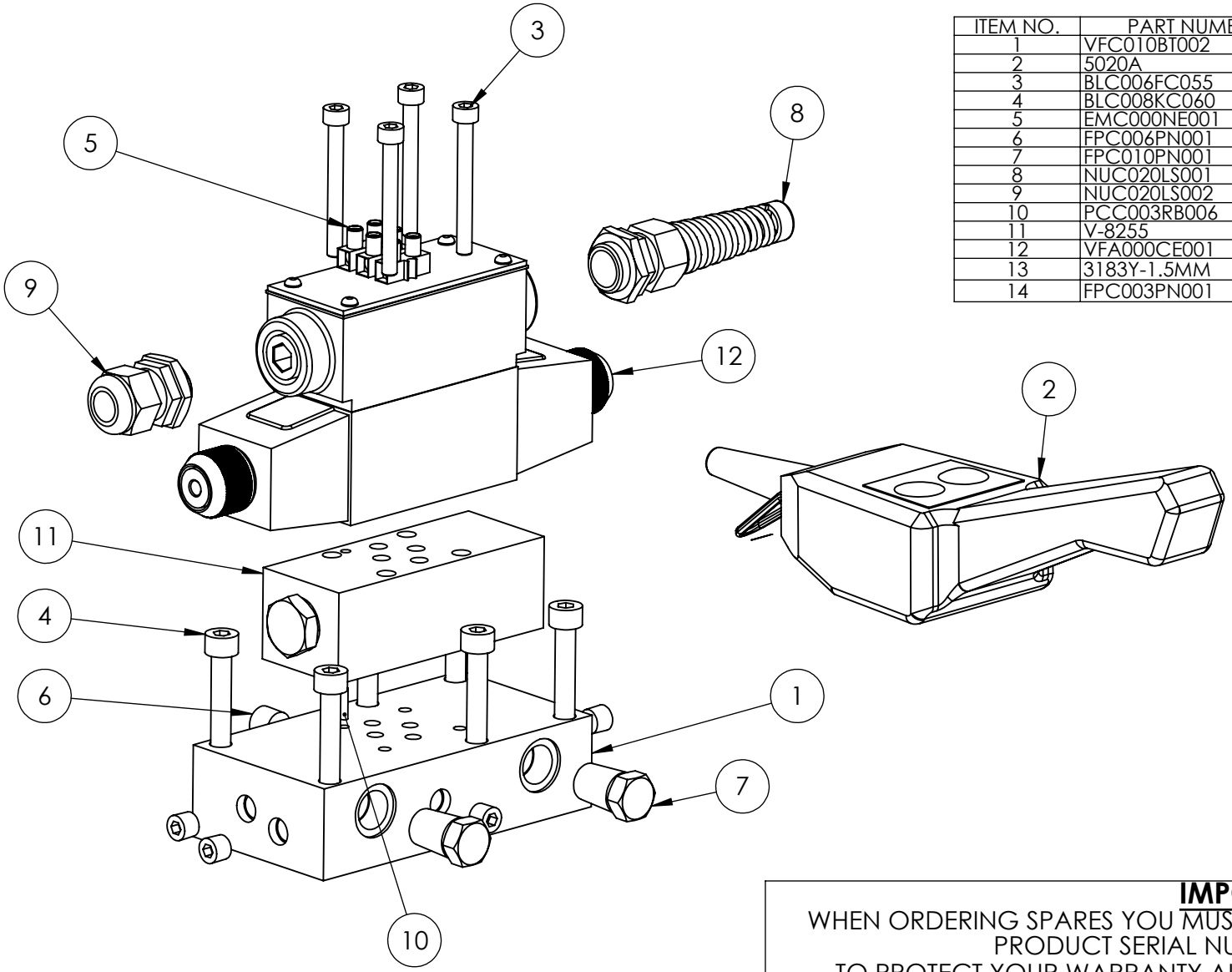

ITEM NO.	PART NUMBER	DESCRIPTION	QTY.
1	VFC010BT002	HI- FORCE VALVE BASE.	1
2	5020A	HAND PENDANT	1
3	BLC006FC055	CAP HD SCREW	4
4	BLC008KC060	CAP HD SCREW	6
5	EMC000NE001	CONNECTOR BLOCK 6MM	1
6	FPC006PN001	PLUG	1
7	FPC010PN001	3/8 NPT BLANKING PLUG	2
8	NUC020LS001	FLEXIBLE CABLE GLAND.	1
9	NUC020LS002	GLAND 6- 12MM	1
10	PCC003RB006	M3X 12MM SELLOCK PIN	1
11	V-8255	DUAL P.O CHECK VALVE	1
12	VFA000CE001	4 WAY D/A SOL. VALVE 24V	1
13	3183Y-1.5MM	3 CORE PVC CABLE (NOT SHOWN).	2
14	FPC003PN001	PLUG	4

IMPORTANT

WHEN ORDERING SPARES YOU MUST STATE THE FULL PART NUMBER AND THE PRODUCT SERIAL NUMBER - FROM THE LABEL
TO PROTECT YOUR WARRANTY ALWAYS USE GENUINE HI-FORCE PARTS.

www.hi-force.com

Hi-Force HYDRAULIC TOOLS

VALVE ASSEMBLY 4 WAY PMV4-L

SERIAL NUMBERS
UP TO BS8411

SPARE PARTS LIST NO.
PMV4-LP1

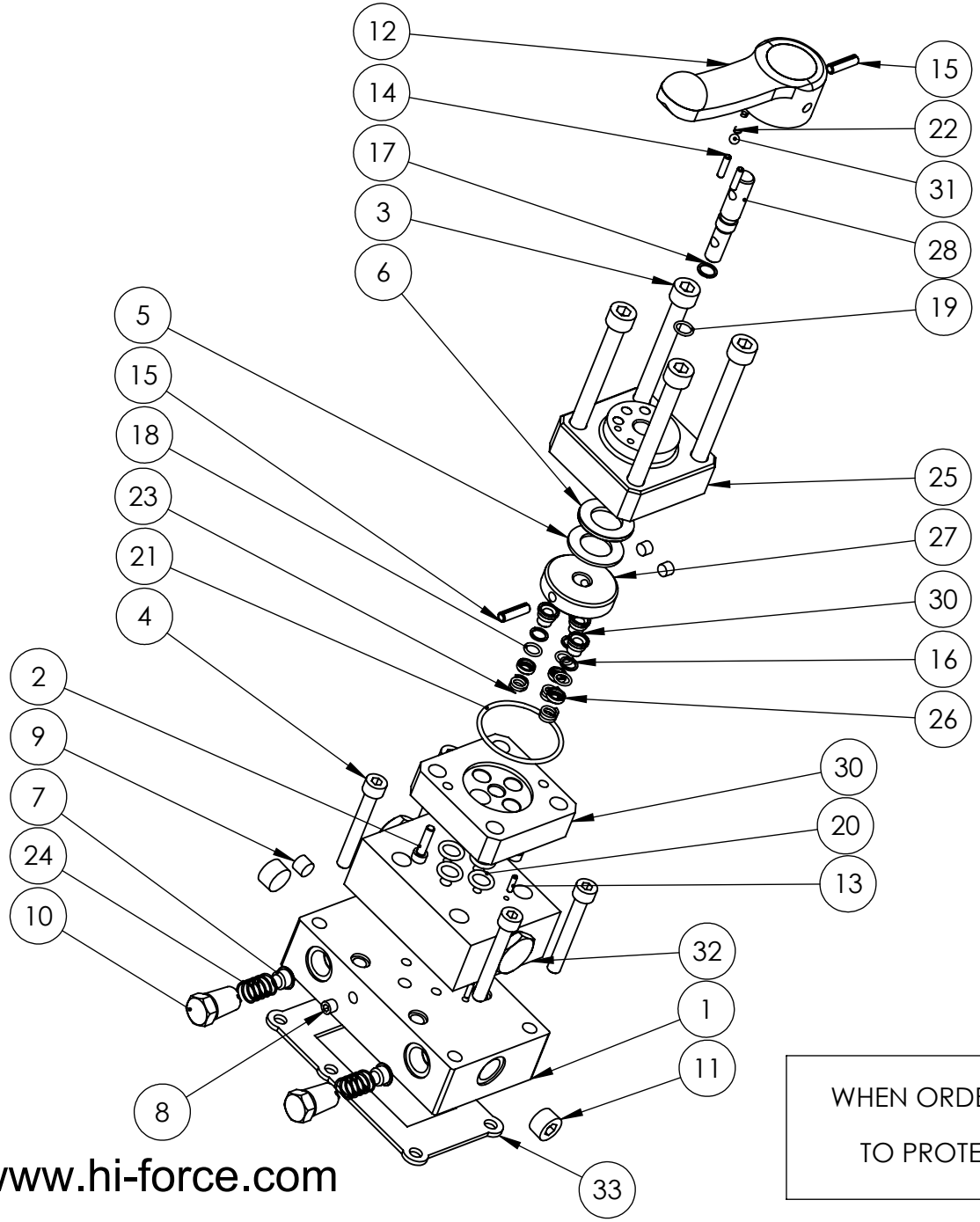

ITEM NO.	PART NUMBER	DESCRIPTION	QTY.
1	VFC010BF007	VALVE MOUNTING BLOCK	1
2	BLC005HU020	CAP HD SCREW	2
3	BLC010LC100	CAP HD SCREW	4
4	BLC008KC060	CAP HD SCREW	4
5	BSC035NA001	NEEDLE BEARING	1
6	BSC035NA002	HOUSING WASHER	1
7	FFC011MG001	LAST CHANCE FILTER	2
8	FPC002PN001	PLUG	3
9	FPC003PN001	PLUG	1
10	FPC010PN001	3/8 NPT BLANKING PLUG	2
11	FPC010PN002	3/8 X 7/8 IN. NPT SOCKET PLUG	2
12	HLC012LP002	HANDLE	1
13	PCC003RB006	SPRING PIN	2
14	PCC004RC001	SPRING PIN	2
15	PCC006RD000	SPRING PIN	2
16	X	BACK UP RING	3
17	X	BACK UP RING	1
18	X	O - RING	3
19	X	O - RING	1
20	X	O - RING	4
21	X	O - RING	1
22	SPC005CA001	SPRING	1
23	SPC010CA001	SPRING	3
24	SPC014LC001	COMPRESSION SPRING FOR FILTER	2
25	VFC000BD003	VALVE BODY	1
26	VFC000SC001	SHEAR SEAL COLLAR	3
27	VFC000SQ002	VALVE ROTOR	1
28	VFC000SR002	SPINDLE	1
30	VFC000ST001	SHEAR SEAL PLATE	1
30	VFC000SU001	SHEAR SEAL	3
31	X	6 mm BALL	1
32	V-8245	DUAL CHECK VALVE	1
33	X	GASKET	1

ALL PARTS MARKED 'X' SUPPLIED IN KIT PMV4TP1-K ONLY.

IMPORTANT

WHEN ORDERING SPARES YOU MUST STATE THE FULL PART NUMBER AND THE PRODUCT SERIAL NUMBER - FROM THE LABEL
TO PROTECT YOUR WARRANTY ALWAYS USE GENUINE HI-FORCE PARTS.

Hi-Force HYDRAULIC TOOLS	HEP2 ELECTRIC DRIVEN PUMP	SERIAL NUMBERS UP TO BS8411	SPARE PARTS LIST NO. HEP2P1

MODEL					PUMP	VALVE	TANK	MOTOR	GEAR PUMP	CONNECTOR	FEED PIPE
HEP207	1	1	1		TYPE200-24	PM1	PPR10	EM110/1.5/4	GP48	15510B	FPC013NC001, FPC013FC001
HEP207	1	1	2		TYPE200-24	PM1	PPR10	EM240/1.5/4	GP48	15510B	FPC013NC001, FPC013FC001
HEP207	1	1	4		TYPE200-24	PM1	PPR10	EM415/1.5/4	GP48	15510B	FPC013NC001, FPC013FC001
HEP207	1	2	1		TYPE200-24	PM1	PPR25	EM110/1.5/4	GP48	15510B	FPC013AC001
HEP207	1	2	2		TYPE200-24	PM1	PPR25	EM240/1.5/4	GP48	15510B	FPC013AC001
HEP207	1	2	4		TYPE200-24	PM1	PPR25	EM415/1.5/4	GP48	15510B	FPC013AC001
HEP207	2	1	1		TYPE200-24	PMV2	PPR10	EM110/1.5/4	GP48	15510B	FPC013NC001, FPC013FC001
HEP207	2	1	2		TYPE200-24	PMV2	PPR10	EM240/1.5/4	GP48	15510B	FPC013NC001, FPC013FC001
HEP207	2	1	4		TYPE200-24	PMV2	PPR10	EM415/1.5/4	GP48	15510B	FPC013NC001, FPC013FC001
HEP207	2	2	1		TYPE200-24	PMV2	PPR25	EM110/1.5/4	GP48	15510B	FPC013AC001
HEP207	2	2	2		TYPE200-24	PMV2	PPR25	EM240/1.5/4	GP48	15510B	FPC013AC001
HEP207	2	2	4		TYPE200-24	PMV2	PPR25	EM415/1.5/4	GP48	15510B	FPC013AC001
HEP207	3	1	1		TYPE200-24	PMV3-L	PPR10	EM110/1.5/4	GP48	15510B	FPC013NC001, FPC013FC001
HEP207	3	1	2		TYPE200-24	PMV3-L	PPR10	EM240/1.5/4	GP48	15510B	FPC013NC001, FPC013FC001
HEP207	3	1	4		TYPE200-24	PMV3-L	PPR10	EM415/1.5/4	GP48	15510B	FPC013NC001, FPC013FC001
HEP207	3	2	1		TYPE200-24	PMV3-L	PPR25	EM110/1.5/4	GP48	15510B	FPC013AC001
HEP207	3	2	2		TYPE200-24	PMV3-L	PPR25	EM240/1.5/4	GP48	15510B	FPC013AC001
HEP207	3	2	4		TYPE200-24	PMV3-L	PPR25	EM415/1.5/4	GP48	15510B	FPC013AC001
HEP207	4	1	1		TYPE200-24	PMV4-L	PPR10	EM110/1.5/4	GP48	15510B	FPC013NC001, FPC013FC001
HEP207	4	1	2		TYPE200-24	PMV4-L	PPR10	EM240/1.5/4	GP48	15510B	FPC013NC001, FPC013FC001
HEP207	4	1	4		TYPE200-24	PMV4-L	PPR10	EM415/1.5/4	GP48	15510B	FPC013NC001, FPC013FC001
HEP207	4	2	1		TYPE200-24	PMV4-L	PPR25	EM110/1.5/4	GP48	15510B	FPC013AC001
HEP207	4	2	2		TYPE200-24	PMV4-L	PPR25	EM240/1.5/4	GP48	15510B	FPC013AC001
HEP207	4	2	4		TYPE200-24	PMV4-L	PPR25	EM415/1.5/4	GP48	15510B	FPC013AC001
HEP207	3	1	1	S	TYPE200-24	PMV3-S	PPR10	EM110/1.5/4T	GP48	15510B	FPC013NC001, FPC013FC001
HEP207	3	1	2	S	TYPE200-24	PMV3-S	PPR10	EM240/1.5/4T	GP48	15510B	FPC013NC001, FPC013FC001
HEP207	3	1	4	S	TYPE200-24	PMV3-S	PPR10	EM415/1.5/4T	GP48	15510B	FPC013NC001, FPC013FC001
HEP207	3	2	1	S	TYPE200-24	PMV3-S	PPR25	EM110/1.5/4T	GP48	15510B	FPC013AC001
HEP207	3	2	2	S	TYPE200-24	PMV3-S	PPR25	EM240/1.5/4T	GP48	15510B	FPC013AC001
HEP207	3	2	4	S	TYPE200-24	PMV3-S	PPR25	EM415/1.5/4T	GP48	15510B	FPC013AC001
HEP207	4	1	1	S	TYPE200-24	PMV4-S	PPR10	EM110/1.5/4T	GP48	15510B	FPC013NC001, FPC013FC001
HEP207	4	1	2	S	TYPE200-24	PMV4-S	PPR10	EM240/1.5/4T	GP48	15510B	FPC013NC001, FPC013FC001
HEP207	4	1	4	S	TYPE200-24	PMV4-S	PPR10	EM415/1.5/4T	GP48	15510B	FPC013NC001, FPC013FC001
HEP207	4	2	1	S	TYPE200-24	PMV4-S	PPR25	EM110/1.5/4T	GP48	15510B	FPC013AC001
HEP207	4	2	2	S	TYPE200-24	PMV4-S	PPR25	EM240/1.5/4T	GP48	15510B	FPC013AC001
HEP207	4	2	4	S	TYPE200-24	PMV4-S	PPR25	EM415/1.5/4T	GP48	15510B	FPC013AC001

IMPORTANT

WHEN ORDERING SPARES YOU MUST STATE THE FULL PART NUMBER AND THE PRODUCT SERIAL NUMBER - FROM THE LABEL
TO PROTECT YOUR WARRANTY ALWAYS USE GENUINE HI-FORCE PARTS.

Hi-Force HYDRAULIC TOOLS	TWO STAGE PUMP 200-24 SERIES.	SERIAL NUMBERS UP TO BS8411	SPARE PARTS LIST NO. TYPE 200-24P1

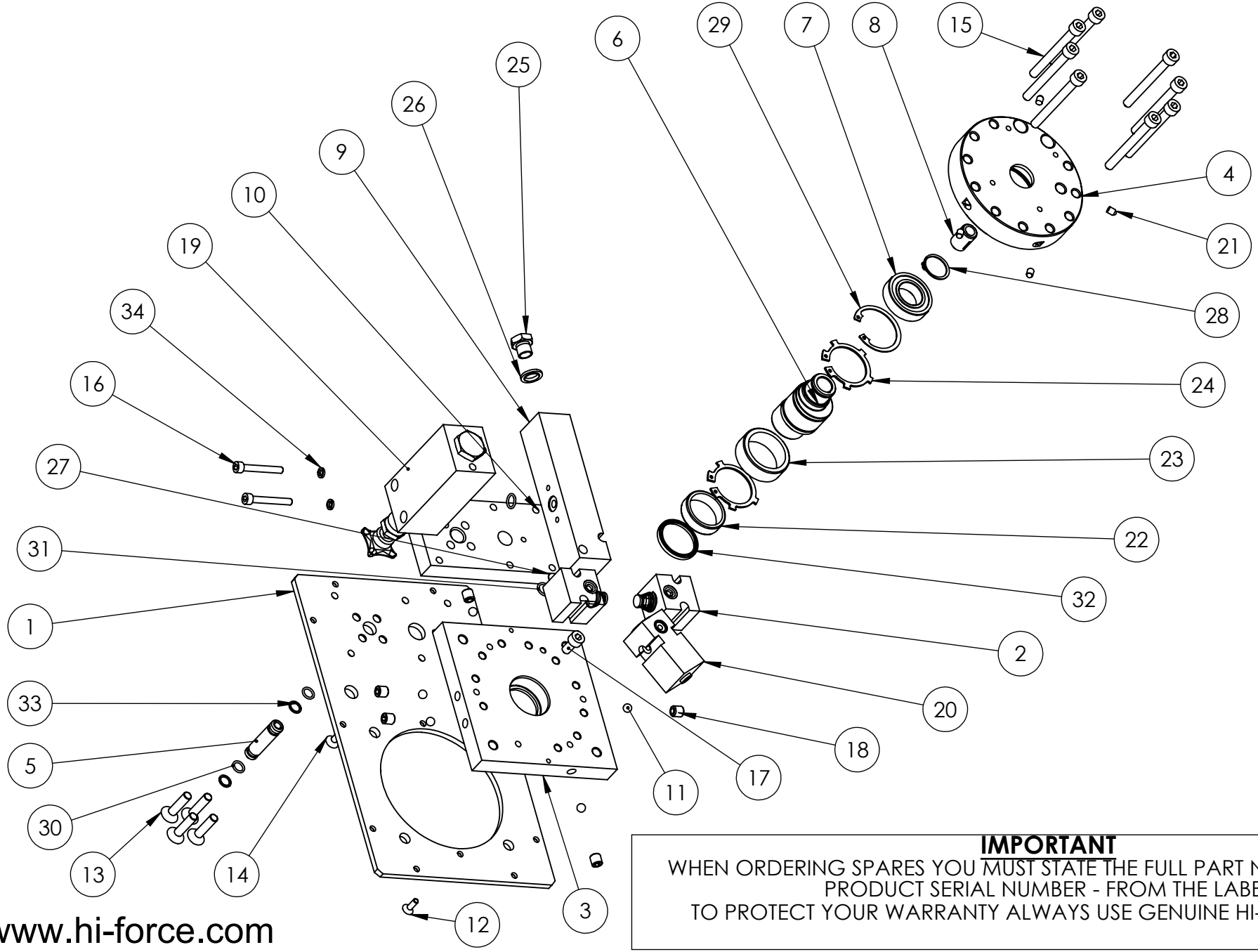

IMPORTANT

WHEN ORDERING SPARES YOU MUST STATE THE FULL PART NUMBER AND THE PRODUCT SERIAL NUMBER - FROM THE LABEL

TO PROTECT YOUR WARRANTY ALWAYS USE GENUINE HI-FORCE PARTS.

www.hi-force.com

Hi-Force HYDRAULIC TOOLS

TWO STAGE PUMP 200-24 SERIES.

SERIAL NUMBERS
UP TO BS8411

SPARE PARTS LIST NO.
TYPE 200-24P1

ITEM NO.	PART NUMBER	DESCRIPTION	QTY.
1	TAC000BA003	COVER PLATE	1
2	15494A	PISTON BLOCK ASSY.	2
3	15497	UPPER PLATE	1
4	15499	LOWER PLATE	1
5	E15503	CONNECTOR PIPE	1
6	15505	24MM DRIVE SHAFT	1
7	BSC025MC001	LOWER PLATE BEARING	1
8	15507	ADAPTOR	1
9	17587	TRANSFER BLOCK	1
10	17588	VALVE PLATE	1
11	BAC008SN000	8mm BALL	5
12	BLC005HF016	SKT CSK SCREW	2
13	BLC008KF035	SKT CSK SCREW	4
14	BLC006JE016	SKT CSK SCREW	1
15	BLC008KC080	CAP HD SCREW	8
16	BLC006JC045	CAP HD SCREW	2
17	BLC008KD016	CAP HD SCREW	1
18	FAS010MA010	M10 X 10 CUP POINT GRUB SCREW	5
19	HPRV1	HIGH PRESSURE R/VALVE	1
20	LPRV1	LOW PRESSURE R/VALVE	1
21	BPC006RS001	SEALING PLUG	4
22	BSC035NC001	UPPER PLATE BEARING	1
23	BSC040ND001	ECCENTRIC BEARING	1
24	STC040AA001	CIRCLIP TYPE 200/300	2
25	FAS006GJ010	1/4 INCH BLANKING PLUG	1
26	X	DOWTY WASHER	1
27	FFC012MA001	SUCTION FILTER	1
28	STC025AA001	CIRCLIP	1
29	STC047BA001	CIRCLIP	1
30	X	O - RING	2
31	X	O - RING	2
32	X	UPPER PLATE OIL SEAL	1
33	X	BACK UP RING	2
34	WAC006BC001	SPRING WASHER	2

PARTS MARKED 'X' SUPPLIED IN KIT HEP207TP1-K ONLY.

SHEET 2 OF 2.

IMPORTANT

WHEN ORDERING SPARES YOU MUST STATE THE FULL PART NUMBER AND THE PRODUCT SERIAL NUMBER - FROM THE LABEL
TO PROTECT YOUR WARRANTY ALWAYS USE GENUINE HI-FORCE PARTS.