Hi-Force HYDRAULIC TOOLS	HPF10 TONNE SERIES WORKSHOP PRESS.	SERIAL NUMBERS UP TO BS8411	SPARE PARTS LIST NO. HPF10P1

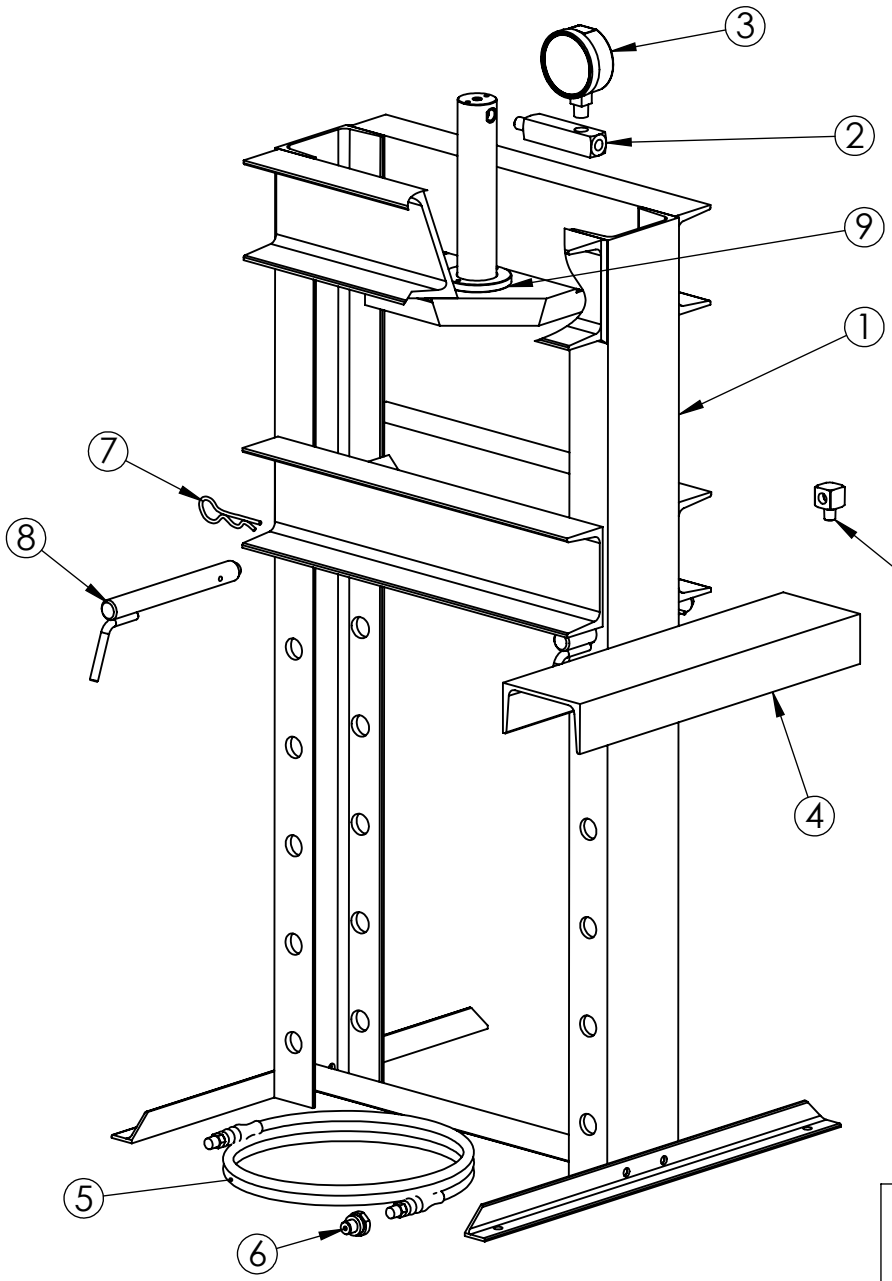

ITEM NO	HPF1020	HPF1030
1	PAS025DJ002	PAS025DJ002
2	HGA2	HGA2
3	HG10	HG10
4	PXC025CF001	PXC025CF001
5	HH2	HH2
6	CM1	CM1
7	STC030RA001	STC030RA001
8	PLA025DJ002	PLA025DJ002
9	ADC010CA007	ADC010CA007

PART NO: HF16
CONNECTOR FOR REAR
OF PUMP.

NOTE: PUMP NOT SHOWN.

PUMP FOR HPF1020 IS HP110
PUMP FOR HPF1030 IS AHP1120

IMPORTANT

WHEN ORDERING SPARES YOU MUST STATE THE FULL PART NUMBER AND THE PRODUCT SERIAL NUMBER - FROM THE LABEL
TO PROTECT YOUR WARRANTY ALWAYS USE GENUINE HI-FORCE PARTS.

www.hi-force.com

Hi-Force HYDRAULIC TOOLS	SPRING RETURN CYLINDER	HSS1010	SERIAL NUMBERS UP TO BS8411	SPARE PARTS LIST NO. HSS1010P1

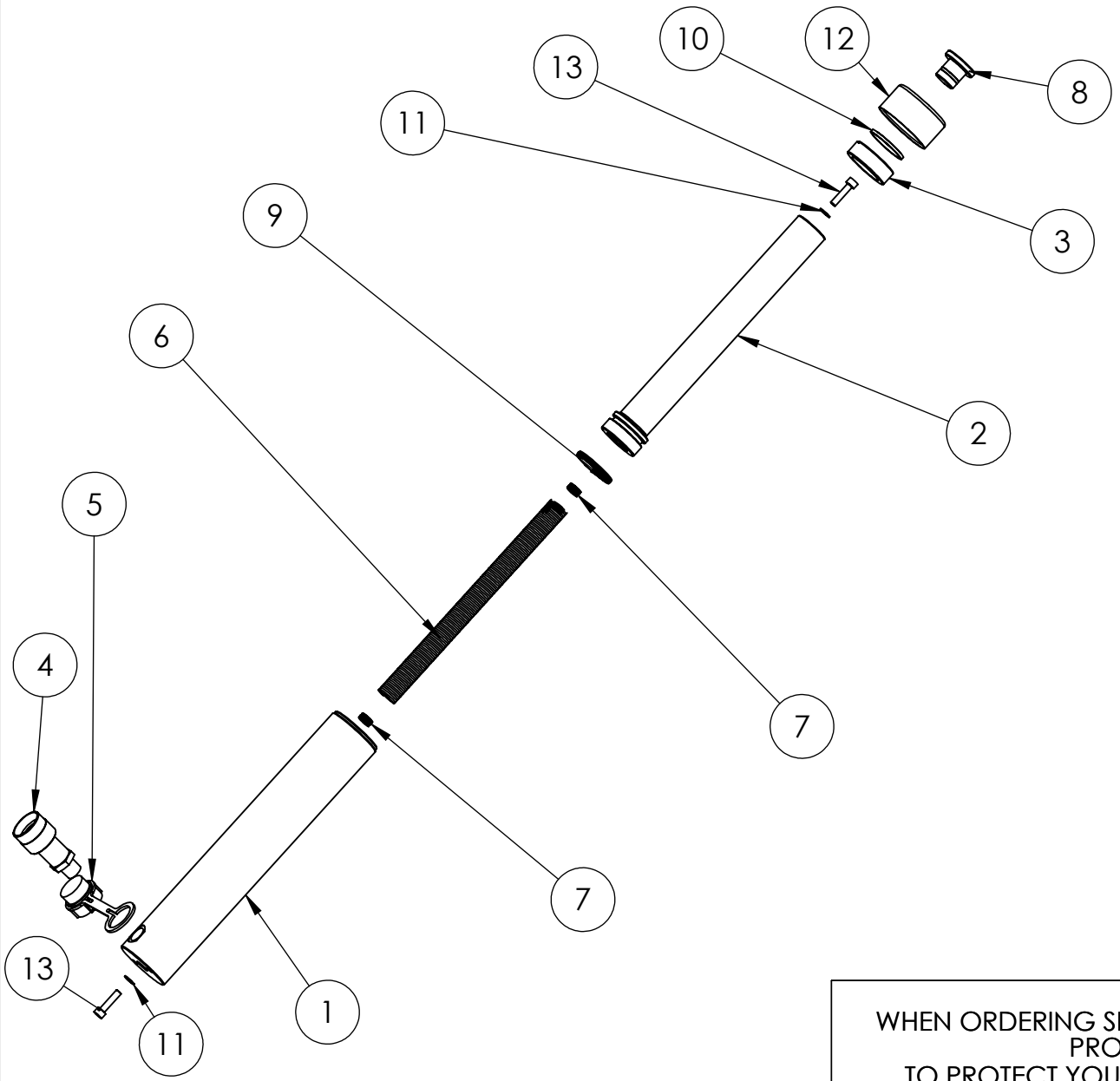

ITEM NO.	PART NUMBER	DESCRIPTION	QTY
1	CBC043SL002	CYLINDER	1
2	PRC043AL001	PISTON	1
3	SRC035WD003	STOP RING	1
4	CF1	COUPLER	1
5	BPC030PP001	DUST COVER	1
6	SPC022SL001	SPRING	1
7	SIC013TB001	INSERT	2
8	SAA022GB003	SADDLE ASSY	1
9	X	PISTON SEAL	1
10	X	WIPER	1
11	X	WASHER	2
12	PTP057TP010	THREAD PROTECTOR	1
13	BLC006JD025	CAP HD SCREW	2

ITEMS MARKED "X"
SUPPLIED IN HSS10TP1-K ONLY

NOTE: IF SPRING IS REPLACED
THE INSERTS SHOULD ALSO BE REPLACED

IMPORTANT

WHEN ORDERING SPARES YOU MUST STATE THE FULL PART NUMBER AND THE PRODUCT SERIAL NUMBER - FROM THE LABEL
TO PROTECT YOUR WARRANTY ALWAYS USE GENUINE HI-FORCE PARTS.

www.hi-force.com

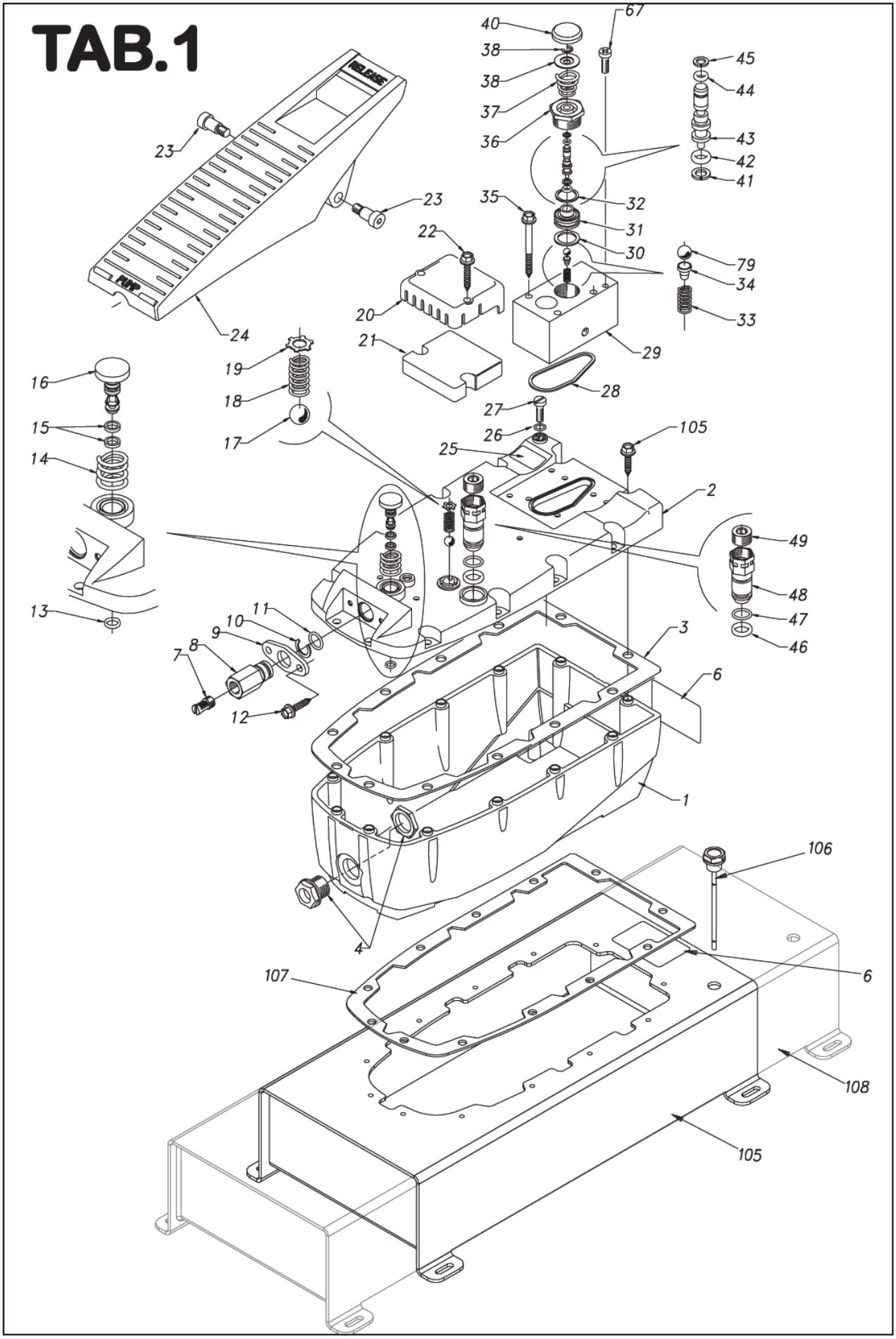
TAB.1
RELEASE
PUMP
40
38
38
37
36
67
45
44
43
42
41
23
23
35
32
31
30
22
79
34
33
20
21
29
24
19
18
17
16
15
14
13
28
27
26
25
105
2
49
48
47
46
11
10
9
8
7
12
3
6
1
106
4
107
6
108
105

TAB.2

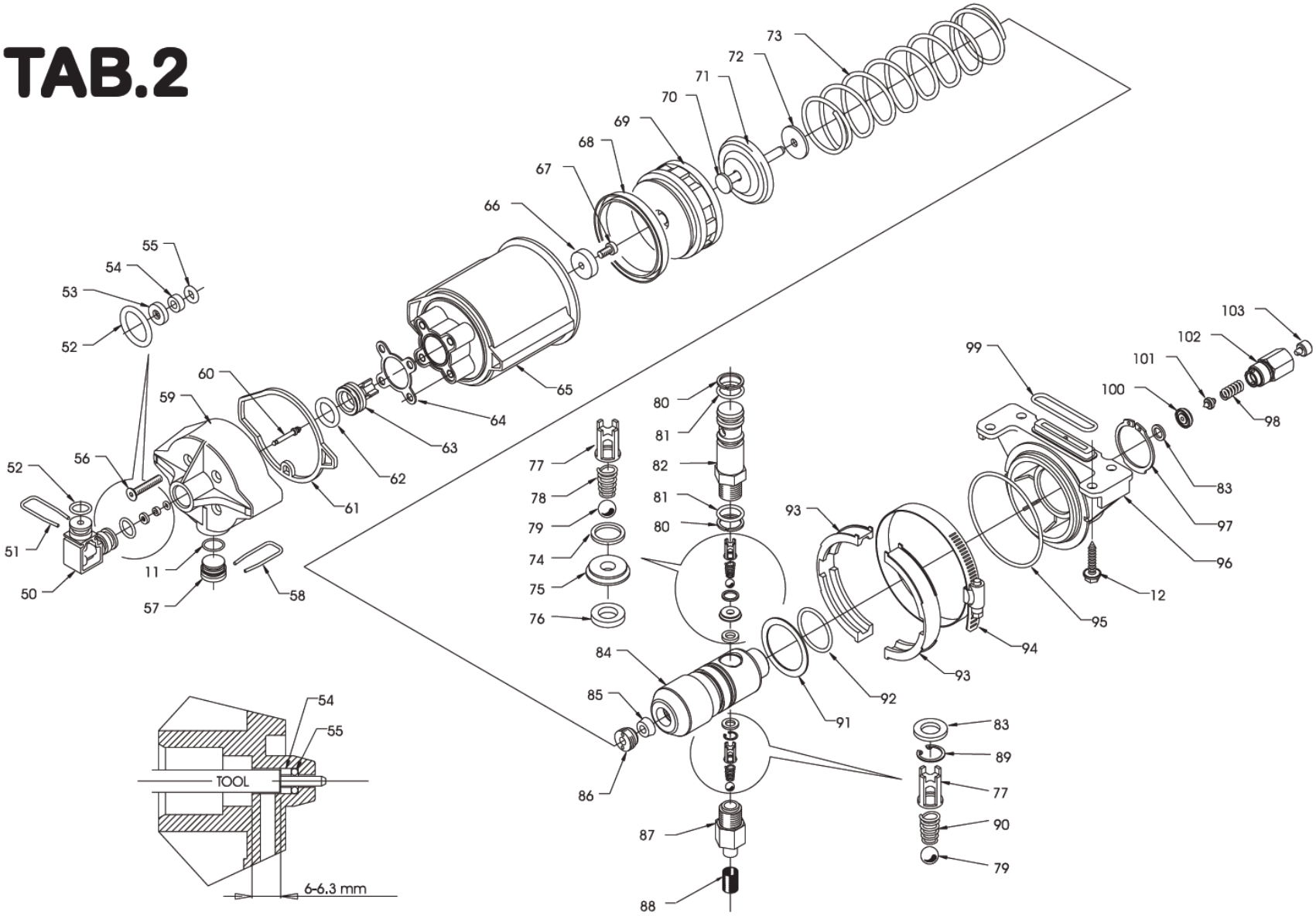

Hi-Force®

Table 1 / Drawing 1			Table 2 / Drawing 2		
Pos	Description	Part number	Pos	Description	Part number
1	Reservoir 2,5 litre – Gray	309310030	11	O-ring	425830021
1	Reservoir 2,5 litre – Black	309310031	12	Thread form screw	426446355
2	Cover – blue	182840010	50	Cover head adapter	309040010
2	Cover – black	182840011	51	Locking adapter staple	141070010
3	Cover seal AHP 2,5 litre	139220110	52	O-ring	425830084
4	Oil lever 2,5 litre	301100020	53	Seal	139200010
6	Identification label	193515051	54	Bushing	116010010
7	Air filter	139110010	55	O-ring	425830006
8	Swivel coupler	128690040	56	Screw M5x0.8x25	426116057
9	Swivel coupler flange	147010010	57	Head plug	182050030
10	Retaining ring	427270140	58	Locking head staple	141070020
11	O-ring	425830021	59	Head	184000060
12	Thread forming screw	426446355	60	Plunger	102170010
13	O-ring	425831074	61	Seal	139200050
14	Beginning cycle pin spring	151050300	62	U-cup	425121044
15	Quad ring	425880020	63	Piston	160900020
16	Pin	102130090	64	Seal	139220090
17	Quad ball	428630070	65	Cylinder	309000020
18	Relief valve spring	151050320	66	Washer seal	141480030
19	Cogged retaining ring	427260040	67	Screw	426310137
20	Foam tube cover	182840020	68	Seal	425620210
21	Foam tube	139220120	69	Piston	160900010
22	Thread forming screw	426446385	70	Piston	160900040
23	Foot pedal att. screw	196020030	71	Spring washer	141500120
24	Foot pedal	110000040	72	Bumper	139220030
25	Reservoir ventilation label	193515053	73	Spring	151050310
26	O-ring	425830011	74	Copper washer	451430007
27	Screw	426321170	75	Feed pin seat	172150040
28	O-ring	425830045	76	Copper washer	451436006
29	Drive adjusting block	142100080	77	Ball guide	150050020
30	Copper washer	451435045	78	Spring	151100090
31	Release valve seat	172150150	79	Ball	428620042
32	Copper washer	451435038	80	BK-ring	425784034
33	Spring	151050330	81	O-ring	425837022
34	Ball guide spring	150060060	82	Plunger	102040030
35	Thread forming screw	426446406	83	Copper washer	451435006
36	Release guide	131050080	84	Body	131050090
37	Spring	151100030	85	Seal	425000021
38	Spring washer	141500130	86	Piston guide head	184000030
39	Retaining ring	427180050	87	Suction filter adapter	128510021
40	Plunger cover	182880020	88	Oil filter	139000010
41	BK-ring	425784018	89	Retaining ring	427160090
42	O-ring	425830009	90	Spring	151100100
43	Plunger	102150030	91	Spring seat washer	141500110
44	O-ring	425830007	92	O-ring	425830108
45	BK-ring	425784014	93	Strap support	177000030
46	O-ring	425830086	94	Standard pipe clamp	427102100
47	O-ring	425830024	95	O-ring	425830136
48	Filter plug	128690050	96	Cover	147130020
49	Taper plug	426620250	97	Retaining ring	427150350
67	Screw	426310137	98	Peak valve spring	151050030
79	Ball	428620042	99	Seal	425000110
104	PTFE ring	141440010	100	Valve seat	172150030
105	Reservoir AHP 5 litre	305170010	101	Spear valve	182260010
106	Oil level 5 litre	428400011	102	Peak valve adapter	128630040
107	Cover seal AHP 5 litre	139220116	103	Peak valve spring	141400070
108	Reservoir AHP 7 litre	305170020	Seal kit AHP 1120: 800050070 – AHP 1121: 800050110		