Hi-Force HYDRAULIC TOOLS	HPF25 TONNE SERIES WORKSHOP PRESS.	SERIAL NUMBERS UP TO BS8411	SPARE PARTS LIST NO. HPF25P1

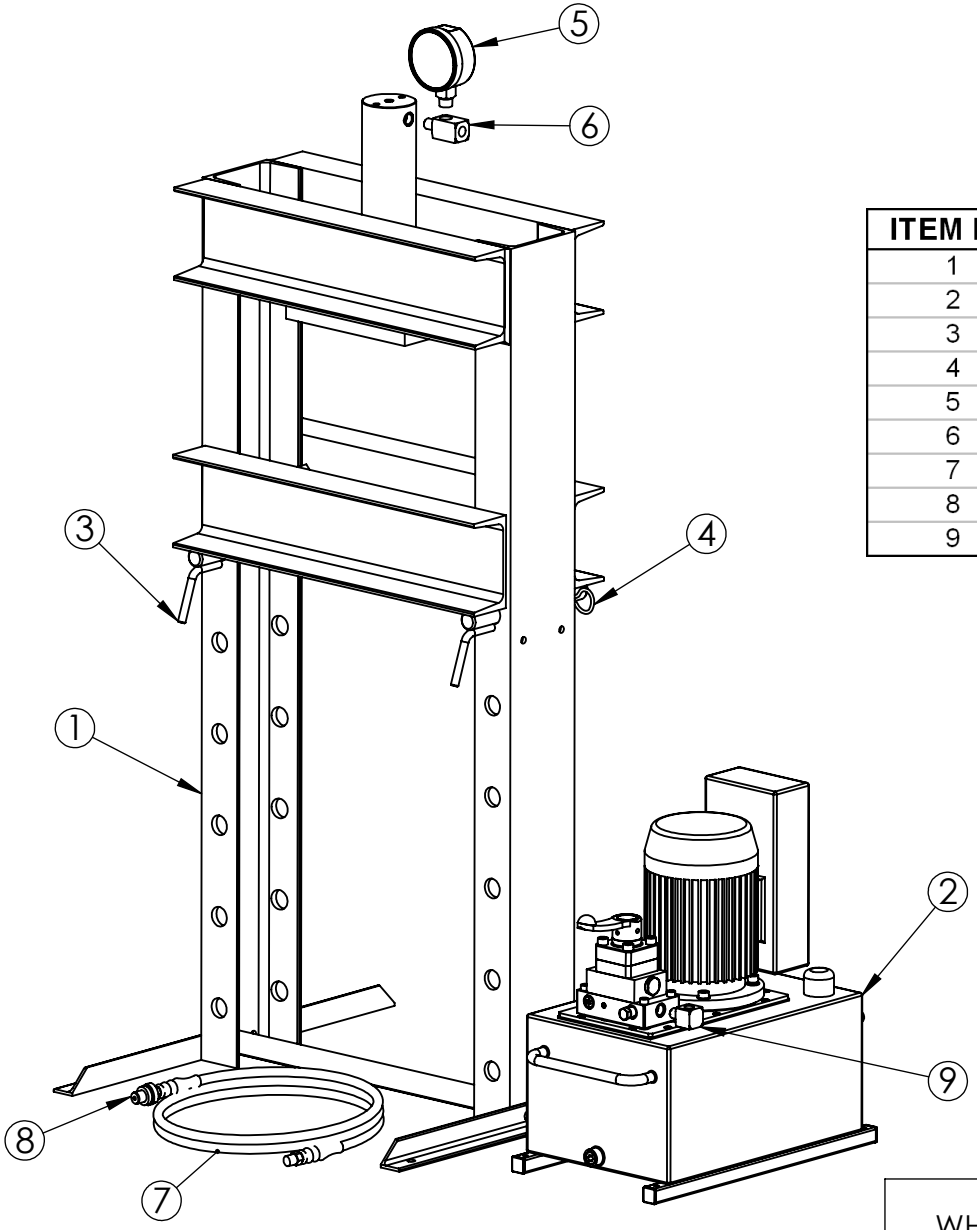

ITEM NO	HPF2520	HPF2530	HPF2541	HPF2542	HPF2544
1	PAS025DJ002	PAS025DJ002	PAS025DJ002	PAS025DJ002	PAS025DJ002
2	HP227	AHP1120	HEP103341	HEP103342	HEP207314
3	PLA025CF001	PLA025CF001	PLA025CF001	PLA025CF001	PLA025CF001
4	STC030RA001	STC030RA001	STC030RA001	STC030RA001	STC030RA001
5	HG25	HG25	HG25	HG25	HG25
6	HGA1	HGA1	HGA1	HGA1	HGA1
7	HH2	HH2	HH2	HH2	HH2
8	CM1	CM1	CM1	CM1	CM1
9	HF16	HF16	HF16	HF16	HF16

IMPORTANT

WHEN ORDERING SPARES YOU MUST STATE THE FULL PART NUMBER AND THE PRODUCT SERIAL NUMBER - FROM THE LABEL
TO PROTECT YOUR WARRANTY ALWAYS USE GENUINE HI-FORCE PARTS.

www.hi-force.com

Hi-Force HYDRAULIC TOOLS	SPRING RETURN CYLINDER HSS2510	SERIAL NUMBERS UP TO BS8411	SPARE PARTS LIST NO. HSS2510P1

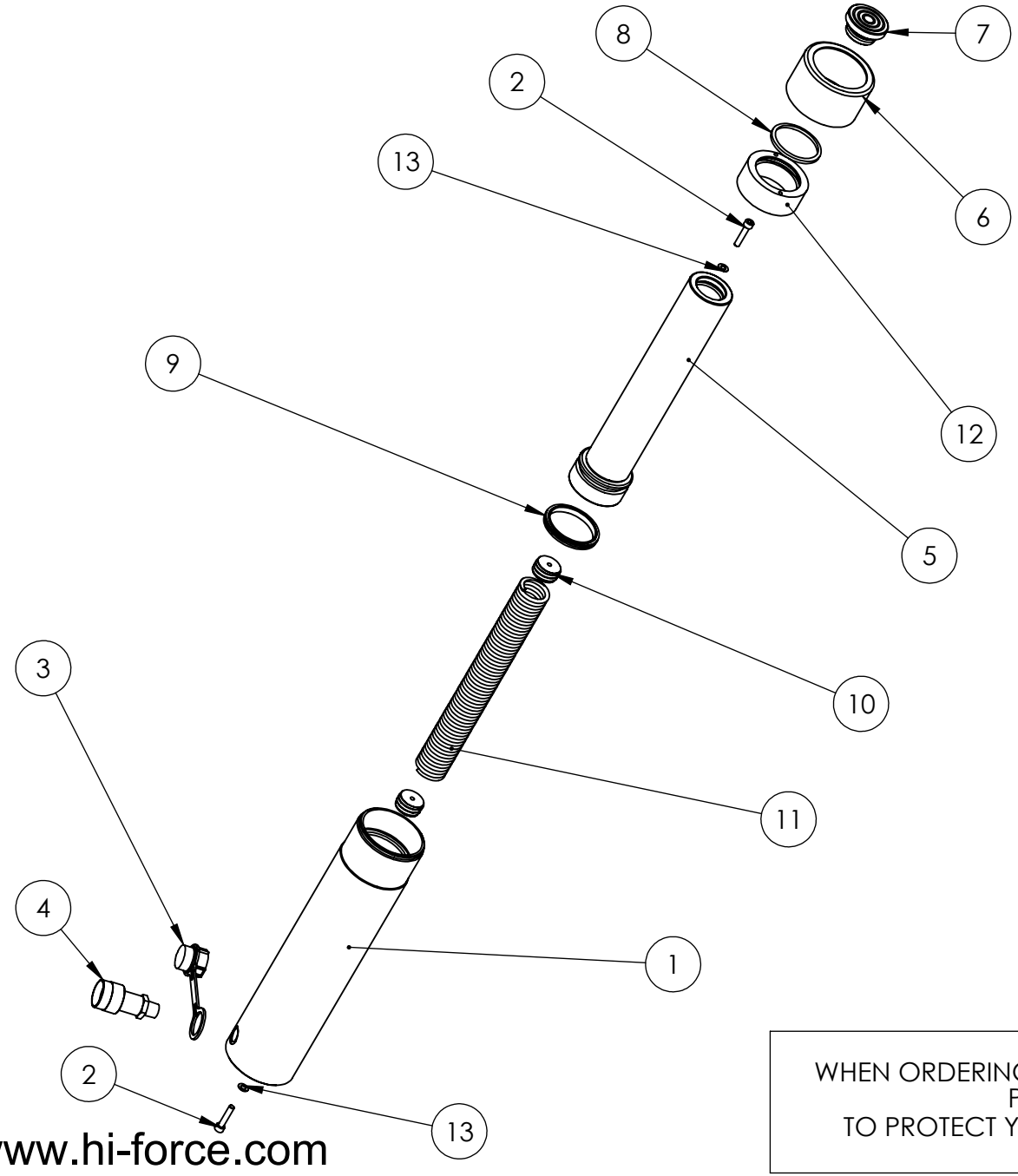

ITEM NO.	PART NUMBER	DESCRIPTION	QTY.
1	CBC067SL001	CYLINDER	1
2	BLC006JD030	CAP HD SCREW	2
3	BPC030PP001	DUST COVER	1
4	CF1	COUPLER	1
5	PRC067AL001	PISTON	1
6	PTP086TP025	THREAD PROTECTOR	1
7	SAA036GB001	SADDLE ASSEMBLY	1
8	X	WIPER	1
9	X	PISTON SEAL	1
10	SIC029TC001	SPRING INSERT	2
11	SPC038TM001	SPRING	1
12	SRC054SF001	STOP RING	1
13	X	WASHER	2

ITEMS MARKED 'X' ARE SUPPLIED IN KIT HSS25TP1-K ONLY.

NOTE: IF THE SPRING IS REPLACED
THE INSERTS SHOULD ALSO BE REPLACED.

IMPORTANT

WHEN ORDERING SPARES YOU MUST STATE THE FULL PART NUMBER AND THE PRODUCT SERIAL NUMBER - FROM THE LABEL
TO PROTECT YOUR WARRANTY ALWAYS USE GENUINE HI-FORCE PARTS.

Hi-Force HYDRAULIC TOOLS	ELECTRIC 2 STAGE COMPACT PUMP	SERIAL NUMBERS UP TO BS8411	SPARE PARTS LIST NO. HEP103P1 SHT 1 OF 10

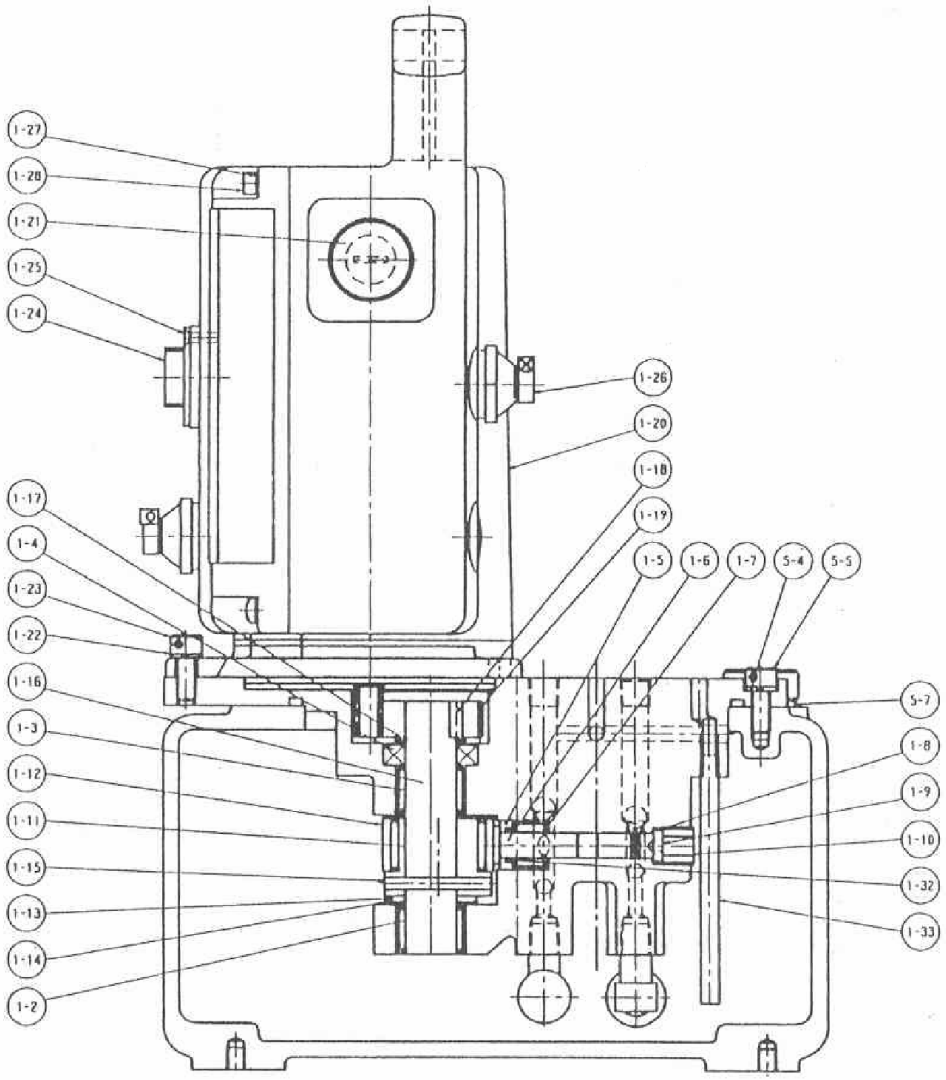

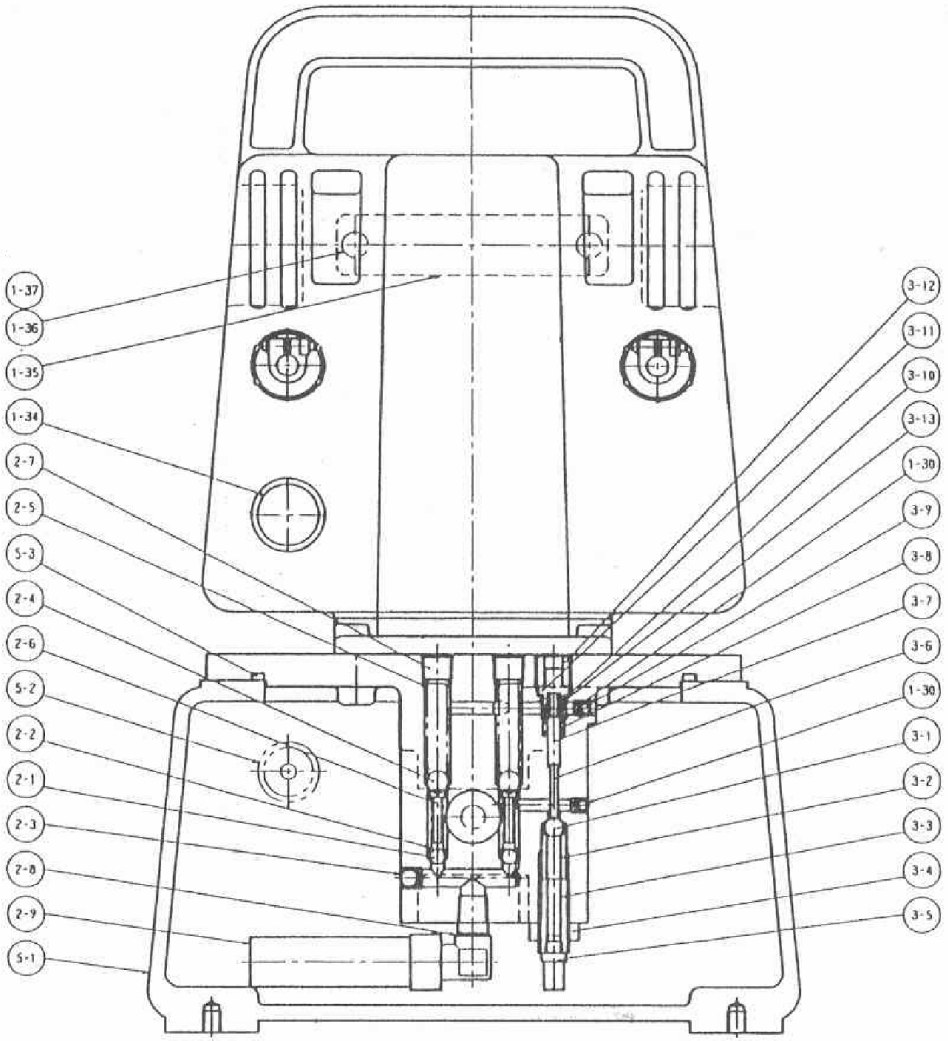

PARTS COMMON TO ALL MODELS SEE SHEET 7 FOR PARTS LISTING

IMPORTANT

WHEN ORDERING SPARES YOU MUST STATE THE FULL PART NUMBER AND THE PRODUCT SERIAL NUMBER - FROM THE LABEL

TO PROTECT YOUR WARRANTY ALWAYS USE GENUINE HI-FORCE PARTS.

www.hi-force.com

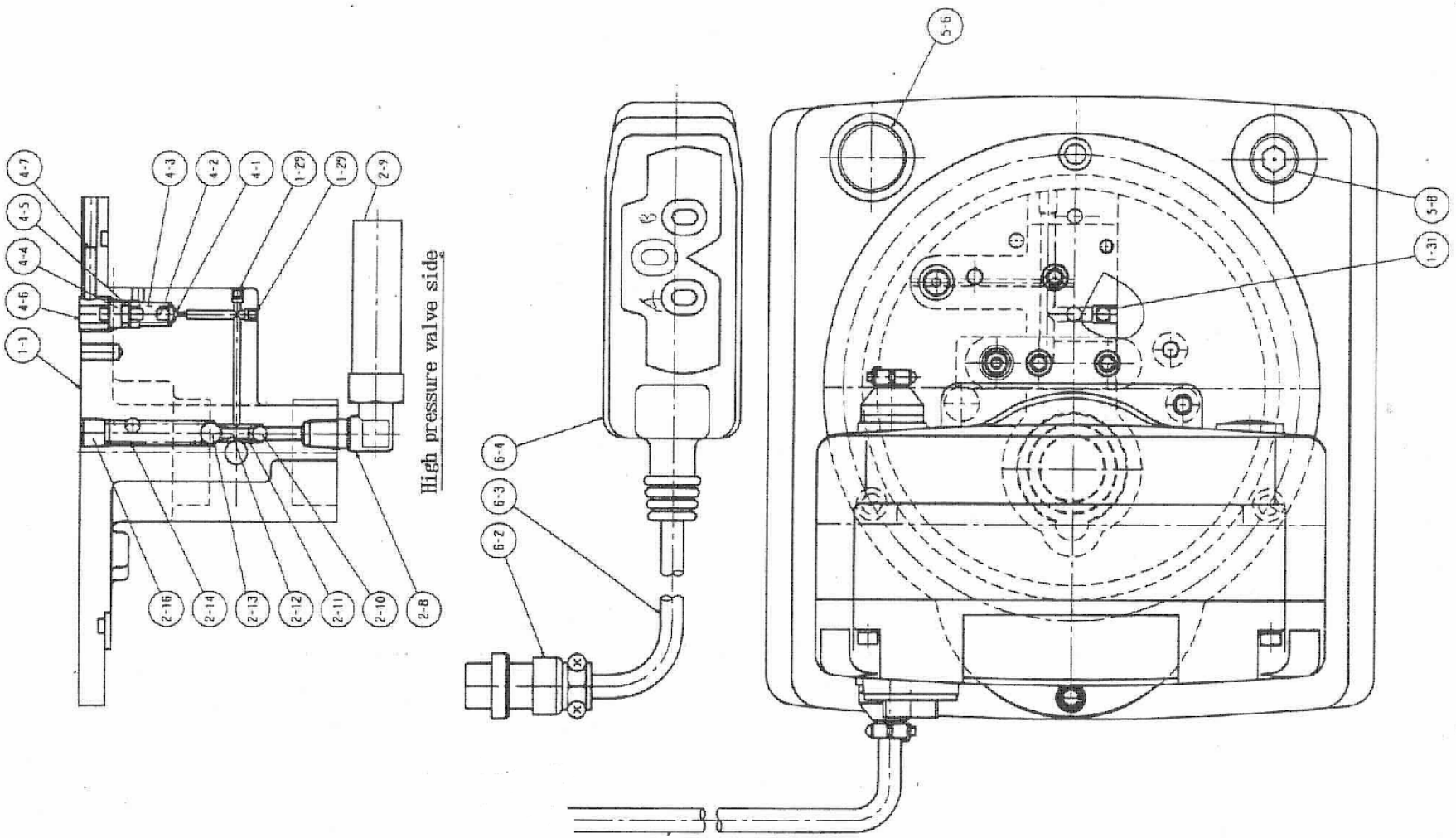

PARTS COMMON TO ALL MODELS SEE SHEET 7 FOR PARTS LISTING

IMPORTANT

WHEN ORDERING SPARES YOU MUST STATE THE FULL PART NUMBER AND THE PRODUCT SERIAL NUMBER - FROM THE LABEL

TO PROTECT YOUR WARRANTY ALWAYS USE GENUINE HI-FORCE PARTS.

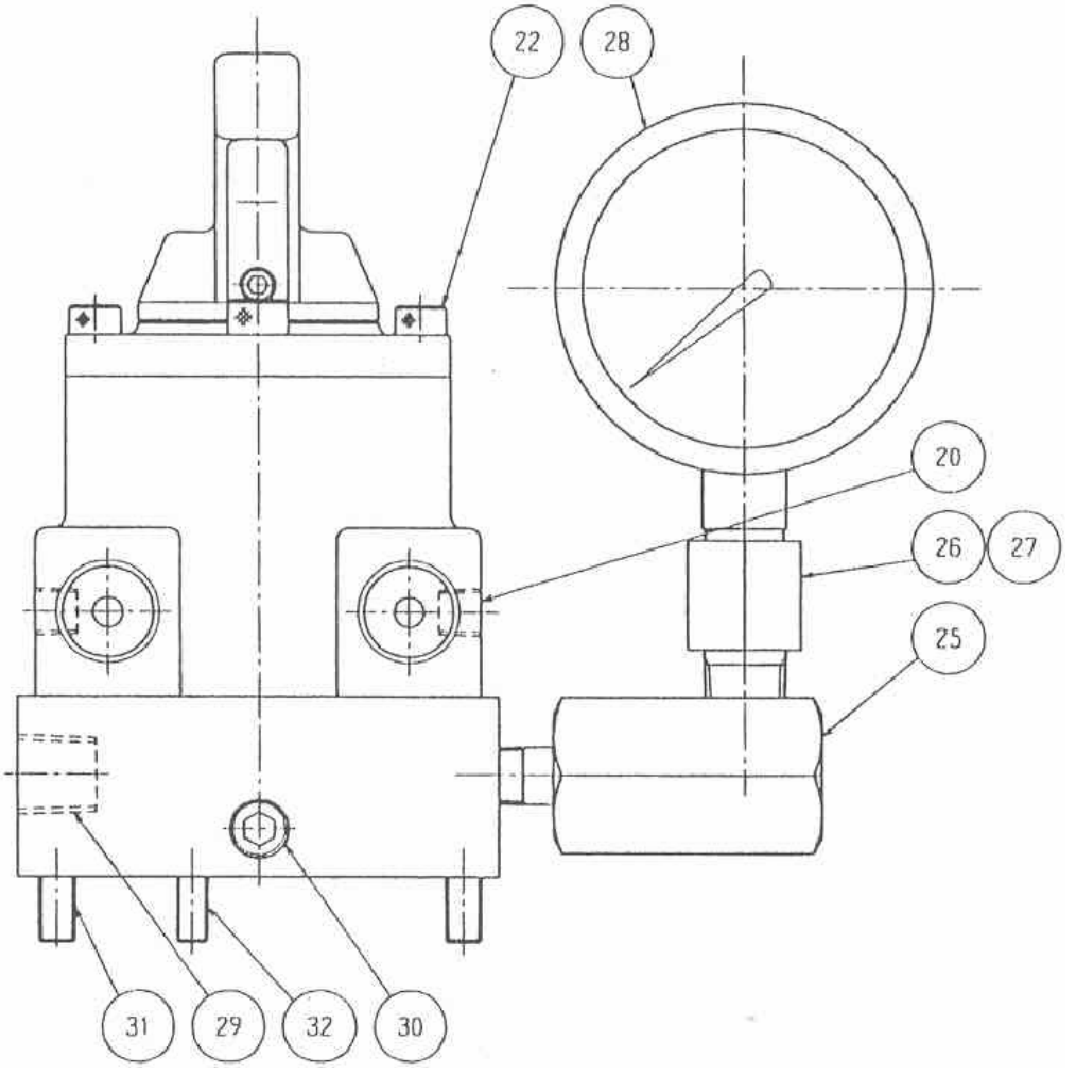

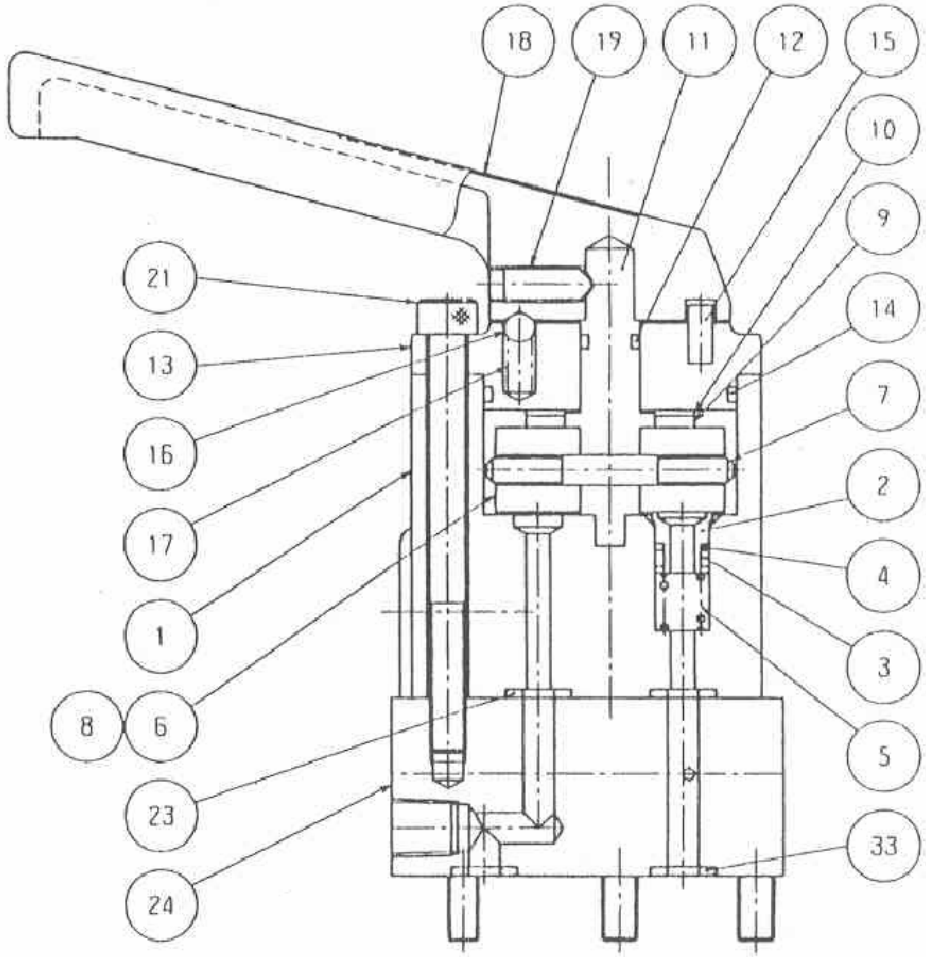

VALVE COMPONENTS FOR HEP103341 AND HEP103342
3 WAY MANUAL VALVE MODELS
HEP103441 AND HEP103442 4 WAY MANUAL VALVE MODELS
SEE SHEET 8 FOR PARTS LISTING

IMPORTANT

WHEN ORDERING SPARES YOU MUST STATE THE FULL PART NUMBER AND THE PRODUCT SERIAL NUMBER - FROM THE LABEL
TO PROTECT YOUR WARRANTY ALWAYS USE GENUINE HI-FORCE PARTS.

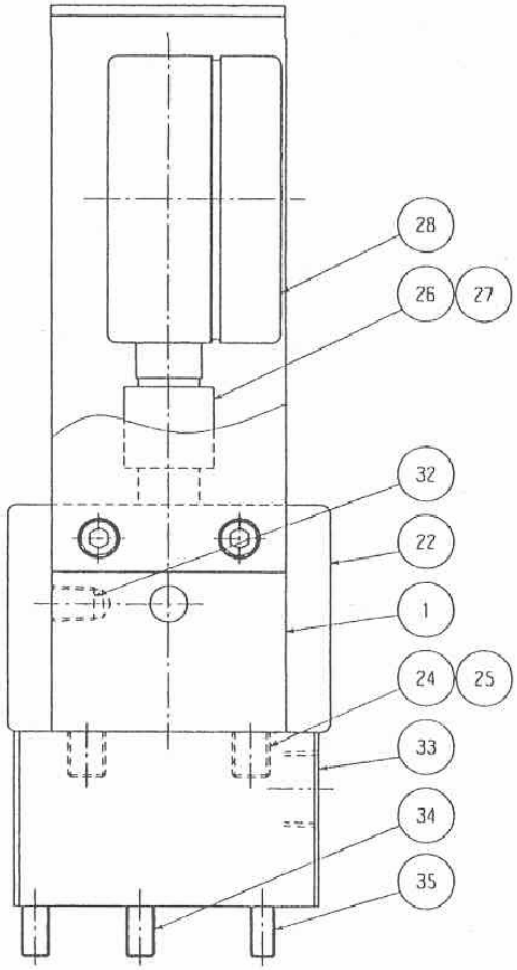

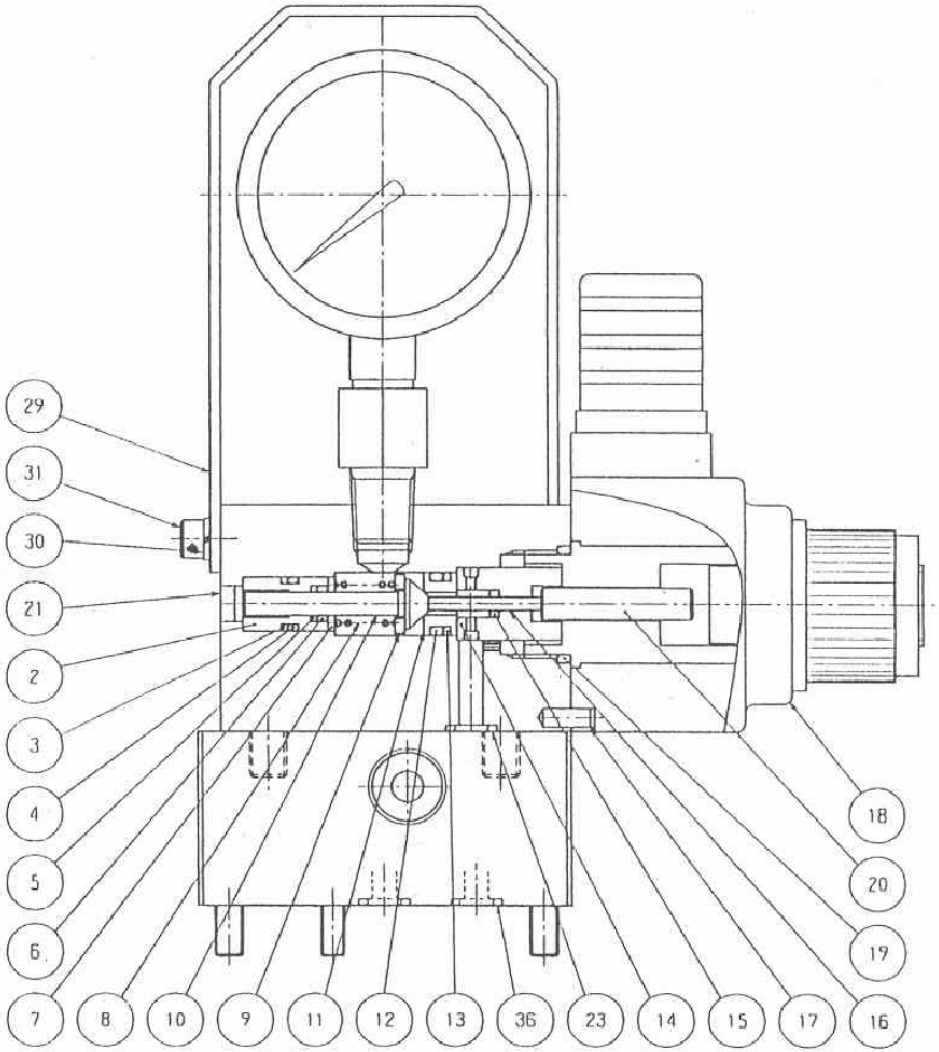

VALVE COMPONENTS FOR HEP103241LS AND HEP103242LS
2 WAY SOLENOID VALVE MODELS WITH HOLD FUNCTION
SEE SHEET 8 FOR PARTS LISTING

www.hi-force.com

IMPORTANT

WHEN ORDERING SPARES YOU MUST STATE THE FULL PART NUMBER AND THE PRODUCT SERIAL NUMBER - FROM THE LABEL
TO PROTECT YOUR WARRANTY ALWAYS USE GENUINE HI-FORCE PARTS.

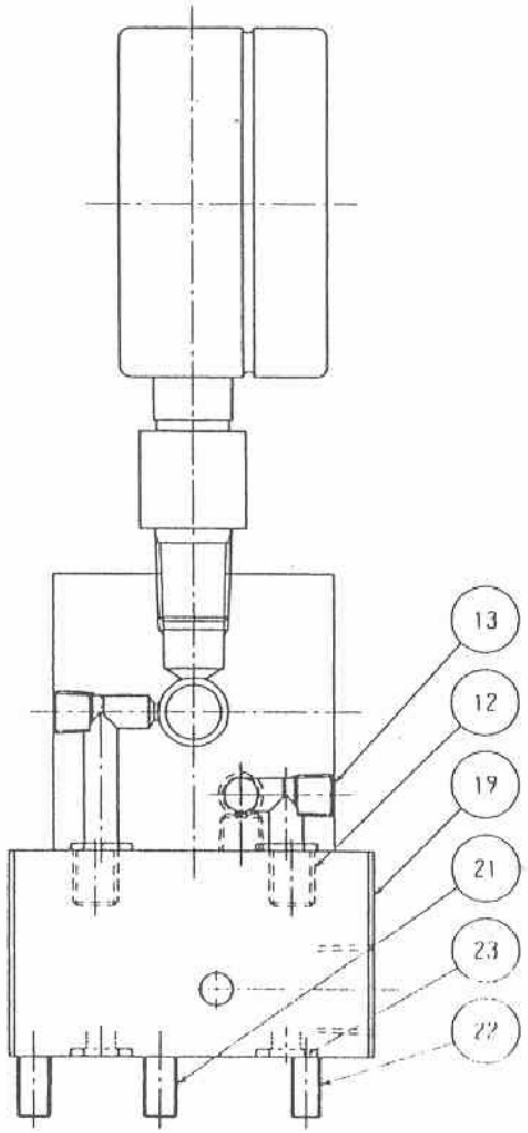

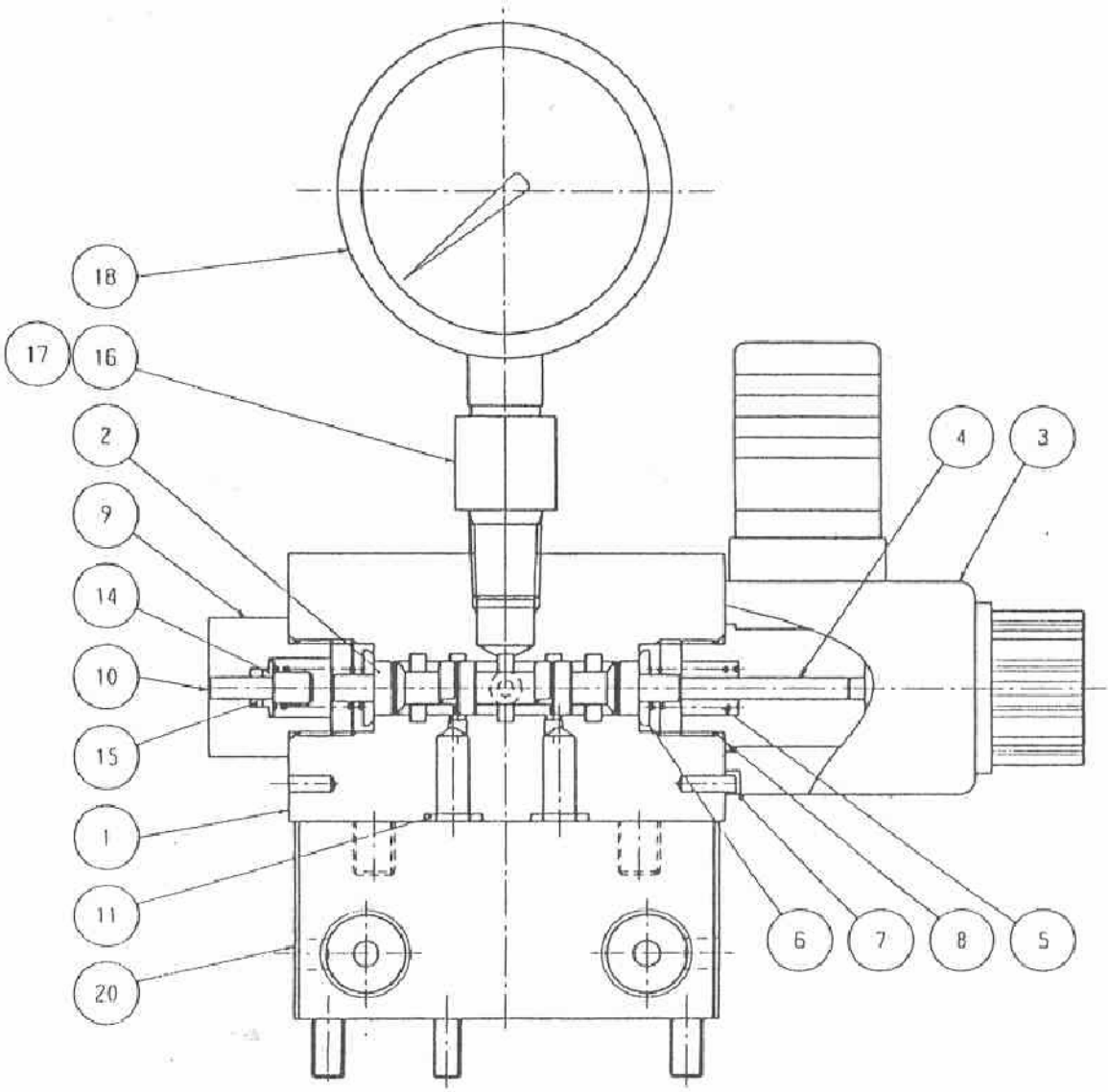

VALVE COMPONENTS FOR HEP103241S AND HEP103242S
2 WAY SOLENOID VALVE MODELS WITH AUTO RETRACT
SEE SHEET 8 FOR PARTS LISTING

IMPORTANT

WHEN ORDERING SPARES YOU MUST STATE THE FULL PART NUMBER AND THE PRODUCT SERIAL NUMBER - FROM THE LABEL
TO PROTECT YOUR WARRANTY ALWAYS USE GENUINE HI-FORCE PARTS.

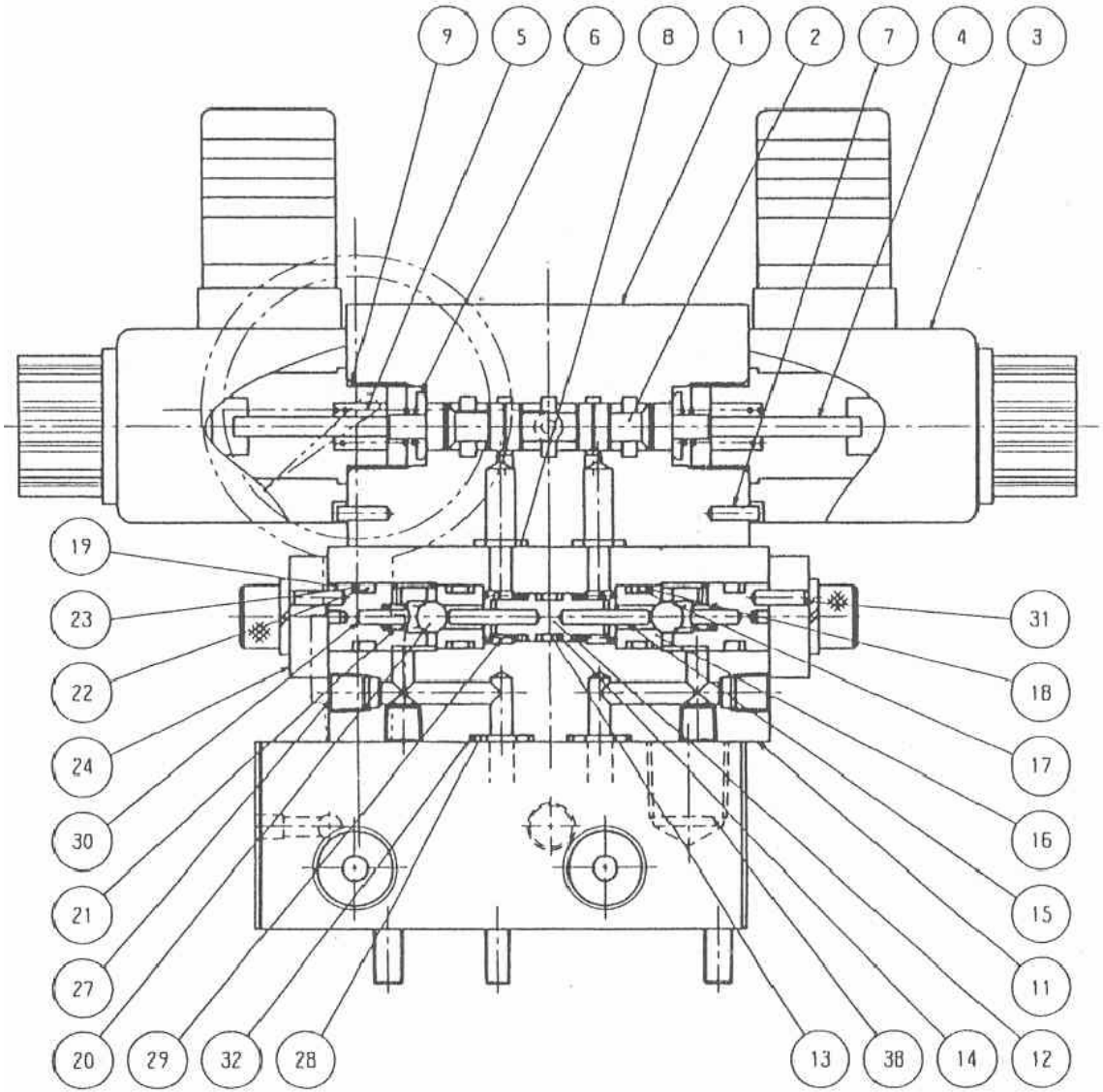

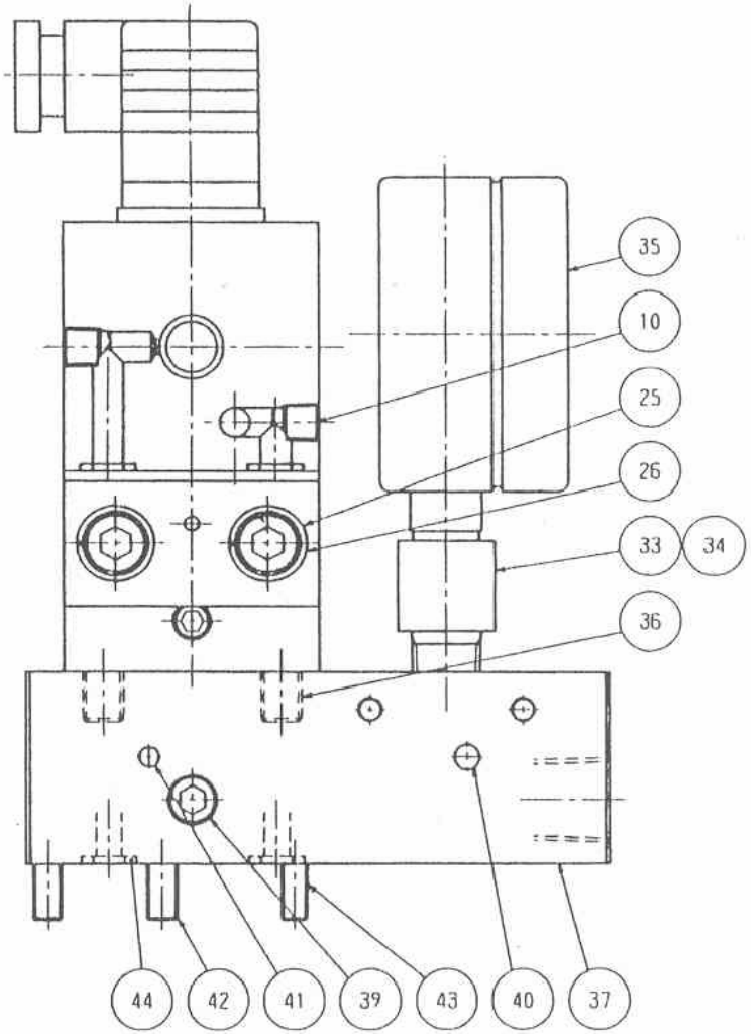

VALVE COMPONENTS FOR HEP103441LS AND HEP103442LS
4 WAY SOLENOID VALVE MODELS WITH LOCKING FEATURE ON PORTS A AND B SEE SHEET 9 FOR PARTS LISTING

www.hi-force.com

IMPORTANT

WHEN ORDERING SPARES YOU MUST STATE THE FULL PART NUMBER AND THE PRODUCT SERIAL NUMBER - FROM THE LABEL
TO PROTECT YOUR WARRANTY ALWAYS USE GENUINE HI-FORCE PARTS.

Hi-Force HYDRAULIC TOOLS	ELECTRIC 2 STAGE COMPACT PUMP	SERIAL NUMBERS UP TO BS8411	SPARE PARTS LIST NO. HEP103P1 SHT 7 OF 10

ITEM NO.	PART NUMBER	DESCRIPTION	ITEM NO.	PART NUMBER	DESCRIPTION	ITEM NO.	PART NUMBER	DESCRIPTION
1-1	HEP103P1-1	PUMP BODY	2-2	HEP103P1-33	SPRING	4-5	HEP103P1-64	O-RING
1-2	HEP103P1-2	BALL BEARING	2-3	HEP103P1-34	EXPANDER	4-6	HEP103P1-65	SCREW
1-3	HEP103P1-3	BALL BEARING	2-4	HEP103P1-35	STEEL BALL	4-7	HEP103P1-66	LOCK SCREW
1-4	HEP103P1-4	OIL SEAL	2-5	HEP103P1-36	SPRING			
1-5	HEP103P1-5	LOW PRESSURE PISTON	2-6	HEP103P1-37	RETAINER	5-1	HEP103P1-67	RESERVOIR
1-6	HEP103P1-6	HIGH PRESSURE PISTON	2-7	HEP103P1-38	BLIND PLUG	5-2	HEP103P1-68	OIL GAUGE
1-7	HEP103P1-7	SPRING	2-8	HEP103P1-39	L FITTING	5-3	HEP103P1-69	O-RING
1-8	HEP103P1-8	COPPER PACKING	2-9	HEP103P1-40	FILTER	5-4	HEP103P1-70	SPRING WASHER
1-9	HEP103P1-9	BLIND PLUG	2-10	HEP103P1-41	STEEL BALL	5-5	HEP103P1-71	BOLT
1-10	HEP103P1-10	SCREW PLUG	2-11	HEP103P1-42	SPRING	5-6	HEP103P1-72	OIL PLUG
1-11	HEP103P1-11	ECCENTRIC COLLAR	2-12	HEP103P1-43	RETAINER	5-7	HEP103P1-73	O-RING
1-12	HEP103P1-12	BALL BEARING	2-13	HEP103P1-44	STEEL BALL	5-8	HEP103P1-74	BLIND SCREW
1-13	HEP103P1-13	THRUST BEARING	2-14	HEP103P1-45	SPRING			
1-14	HEP103P1-14	THRUST WASHER	2-15	HEP103P1-46		6-2	HEP103P1-75	PLUG SOCKET
1-15	HEP103P1-15	SPRING PIN	2-16	HEP103P1-47	BLIND PLUG	6-3	HEP103P1-76	PENDANT CORD
1-16	HEP103P1-16	DRIVE SHAFT				6-4	HEP103P1-77	PENDANT SWITCH
1-17	HEP103P1-17	G TYPE LINK	3-1	HEP103P1-48	STEEL BALL			
1-18	HEP103P1-18	KEY	3-2	HEP103P1-49	SPRING			
1-19	HEP103P1-19	GEAR	3-3	HEP103P1-50	ADJUSTING SCREW			
1-20	HEP103P1-20	ELECTRIC MOTOR	3-4	HEP103P1-51	LOCK NUT			
1-21	HEP103P1-21	RUBBER PLUG	3-5	HEP103P1-52	AIR FILTER			
1-22	HEP103P1-22	SPRING WASHER	3-6	HEP103P1-53	NEEDLE ROLLER			
1-23	HEP103P1-23	BOLT	3-7	HEP103P1-54	NEEDLE ROLLER			
1-24	HEP103P1-24	SOCKET PLUG	3-8	HEP103P1-55	O-RING			
1-25	HEP103P1-25	SCREW	3-9	HEP103P1-56	BACK UP RING			
1-26	HEP103P1-26	CAP CONE	3-10	HEP103P1-57	COPPER PACKING			
1-27	HEP103P1-27	SPRING WASHER	3-11	HEP103P1-58	BLIND PIECE			
1-28	HEP103P1-28	BOLT	3-12	HEP103P1-59	BLIND SCREW			
1-29	HEP103P1-29	EXPANDER						
1-30	HEP103P1-30	EXPANDER	4-1	HEP103P1-60	STEEL BALL			
1-31	HEP103P1-31	EXPANDER	4-2	HEP103P1-61	BALL RECIEVER			
			4-3	HEP103P1-62	SPRING			
2-1	HEP103P1-32	STEEL BALL	4-4	HEP103P1-63	SPRING WASHER			

PARTS COMMON TO ALL MODELS
SEE SHEETS 1 AND 2

IMPORTANT

WHEN ORDERING SPARES YOU MUST STATE THE FULL PART NUMBER AND THE PRODUCT SERIAL NUMBER - FROM THE LABEL
TO PROTECT YOUR WARRANTY ALWAYS USE GENUINE HI-FORCE PARTS.

PARTS FOR HEP103341, HEP103342, HEP103441 & HEP103442 MANUAL VALVES (SHEET 3)			PARTS FOR HEP103241LS, HEP103242LS SOLENOID VALVES (SHEET 4)			PARTS FOR HEP103241S & HEP103242S (SHEET 5)		
ITEM NO.	PART NUMBER	DESCRIPTION	ITEM NO.	PART NUMBER	DESCRIPTION	ITEM NO.	PART NUMBER	DESCRIPTION
1	HEP103P1-78	VALVE BODY	1	HEP103P1-111	VALVE BODY	1	HEP103P1-146	VALVE BODY
2	HEP103P1-79	VALVE SEAT	2	HEP103P1-112	SLEEVE	2	HEP103P1-147	SPOOL SHAFT
3	HEP103P1-80	O-RING	3	HEP103P1-113	BACK UP RING	3	HEP103P1-148	SOLENOID
4	HEP103P1-81	BACK UP RING	4	HEP103P1-114	O-RING	4	HEP103P1-149	PUSH PIN
5	HEP103P1-82	SPRING 1	5	HEP103P1-115	BACK UP RING	5	HEP103P1-150	SPRING
6	HEP103P1-83	ROTARY VALVE	6	HEP103P1-116	O-RING	6	HEP103P1-151	SPRING RECEIVER
7	HEP103P1-84	FIXED PIN	7	HEP103P1-117	COLLAR	7	HEP103P1-152	POSITIONING PIN
8	HEP103P1-85	BLIND PLUG	8	HEP103P1-118	SPRING	8	HEP103P1-153	O-RING
9	HEP103P1-86	THRUST BEARING	9	HEP103P1-119	SPRING RECEIVER	9	HEP103P1-154	SPRING RECEIVER NUT
10	HEP103P1-87	THRUST WASHER	10	HEP103P1-120	POPPET	10	HEP103P1-155	STOPPER PIN
11	HEP103P1-88	SHAFT	11	HEP103P1-121	VALVE SEAT	11	HEP103P1-156	O-RING
12	HEP103P1-89	O-RING	12	HEP103P1-122	O-RING	12	HEP103P1-157	BOLT
13	HEP103P1-90	COVER	13	HEP103P1-123	BACK UP RING	13	HEP103P1-158	BLIND PLUG
14	HEP103P1-91	O-RING	14	HEP103P1-124	VALVE SEAT RETAINER	14	HEP103P1-159	O-RING COLLAR
15	HEP103P1-92	POSITIONING PIN	15	HEP103P1-125	O-RING	15	HEP103P1-160	O-RING
16	HEP103P1-93	STEEL BALL	16	HEP103P1-126	PUSH PIN 1	16	HEP103P1-161	GAUGE ADAPTOR
17	HEP103P1-94	SPRING 2	17	HEP103P1-127	SPRING PIN	17	HEP103P1-162	COPPER PACKING
18	HEP103P1-95	HANDLE	18	HEP103P1-128	SOLENOID	18	HEP103P1-163	PRESSURE GAUGE
19	HEP103P1-96	SET SCREW	19	HEP103P1-129	O-RING	19	HEP103P1-164	MANIFOLD
20	HEP103P1-97	BLIND PLUG	20	HEP103P1-130	PUSH PIN 2	20	HEP103P1-165	EXPANDER
21	HEP103P1-98	BOLT	22	HEP103P1-131	DUMMY COVER	21	HEP103P1-166	BOLT
22	HEP103P1-99	BOLT	23	HEP103P1-132	O-RING	22	HEP103P1-167	BOLT
23	HEP103P1-100	O-RING	24	HEP103P1-133	BOLT	23	HEP103P1-168	O-RING
24	HEP103P1-101	MANIFOLD	25	HEP103P1-134	SPRING WASHER			
25	HEP103P1-102	NIPPLE	26	HEP103P1-135	GAUGE ADAPTOR			
26	HEP103P1-103	GAUGE ADAPTOR	27	HEP103P1-136	COPPER WASHER			
27	HEP103P1-104	COPPER WASHER	28	HEP103P1-137	PRESSURE GAUGE			
28	HEP103P1-105	PRESSURE GAUGE	29	HEP103P1-138	COVER			
29	HEP103P1-106	BLIND PLUG	30	HEP103P1-139	SPRING WASHER			
30	HEP103P1-107	BLIND PLUG	31	HEP103P1-140	BOLT			
31	HEP103P1-108	BOLT	32	HEP103P1-141	BLIND PLUG			
32	HEP103P1-109	BOLT	33	HEP103P1-142	MANIFOLD			
33	HEP103P1-110	O-RING	34	HEP103P1-143	BOLT			
			35	HEP103P1-144	BOLT			
			36	HEP103P1-145	O-RING			

IMPORTANT

WHEN ORDERING SPARES YOU MUST STATE THE FULL PART NUMBER AND THE PRODUCT SERIAL NUMBER - FROM THE LABEL
TO PROTECT YOUR WARRANTY ALWAYS USE GENUINE HI-FORCE PARTS.

PARTS FOR HEP103441LS & HEP103442LS (SHEET 6)					
ITEM NO.	PART NUMBER	DESCRIPTION	ITEM NO.	PART NUMBER	DESCRIPTION
1	HEP103P1-169	VALVE BODY	23	HEP103P1-191	BACK UP RING
2	HEP103P1-170	SPOOL SHAFT	24	HEP103P1-192	RETAINING PLATE
3	HEP103P1-171	SOLENOID	25	HEP103P1-193	BOLT
4	HEP103P1-172	PUSH PIN	26	HEP103P1-194	SPRING WASHER
5	HEP103P1-173	SPRING	27	HEP103P1-195	BLIND PLUG
6	HEP103P1-174	SPRING RECEIVER	28	HEP103P1-196	O-RING
7	HEP103P1-175	POSITIONING PIN	29	HEP103P1-197	CENTRE SPRING
8	HEP103P1-176	O-RING	30	HEP103P1-198	PARALLEL PIN
9	HEP103P1-177	O-RING	31	HEP103P1-199	SPRING PIN
10	HEP103P1-178	BLIND PLUG	32	HEP103P1-200	BACK UP RING
11	HEP103P1-179	CHECK VALVE BODY	33	HEP103P1-201	GAUGE ADAPTOR
12	HEP103P1-180	PISTON	34	HEP103P1-202	COPPER PACKING
13	HEP103P1-181	O-RING	35	HEP103P1-203	PRESSURE GAUGE
14	HEP103P1-182	BACK UP RING	36	HEP103P1-204	BOLT
15	HEP103P1-183	PUSH PIN	37	HEP103P1-205	MANIFOLD
16	HEP103P1-184	VALVE SEAT	38	HEP103P1-206	BLIND PLUG
17	HEP103P1-185	O-RING	39	HEP103P1-207	BLIND PLUG
18	HEP103P1-186	BACK UP RING	40	HEP103P1-208	EXPANDER
19	HEP103P1-187	VALVE SEAT RETAINER	41	HEP103P1-209	EXPANDER
20	HEP103P1-188	STEEL BALL	42	HEP103P1-210	BOLT
21	HEP103P1-189	SPRING	43	HEP103P1-211	BOLT
22	HEP103P1-190	O-RING	44	HEP103P1-212	O-RING

IMPORTANT

WHEN ORDERING SPARES YOU MUST STATE THE FULL PART NUMBER AND THE PRODUCT SERIAL NUMBER - FROM THE LABEL
TO PROTECT YOUR WARRANTY ALWAYS USE GENUINE HI-FORCE PARTS.

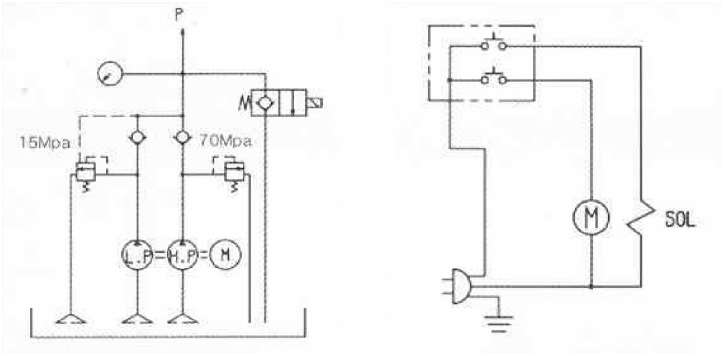

HEP103241LS AN HEP103242LS CIRCUITS

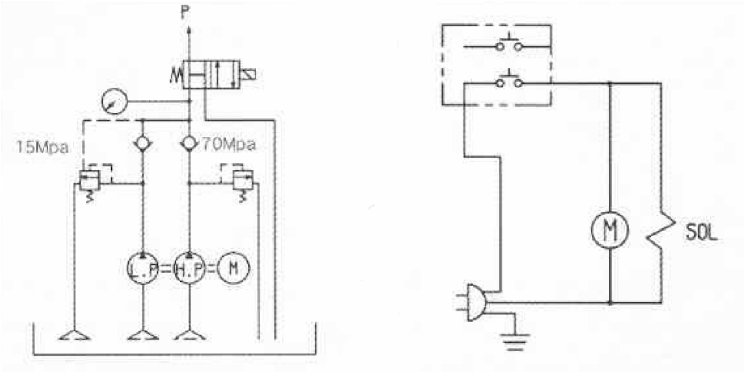

HEP103241S AN HEP103242S CIRCUITS

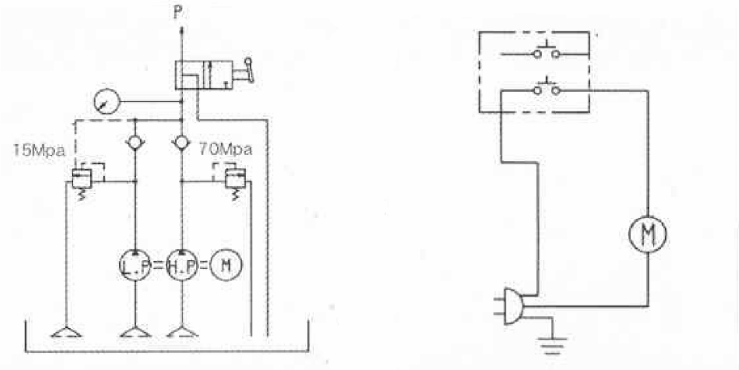

HEP103341 AN HEP103342 CIRCUITS

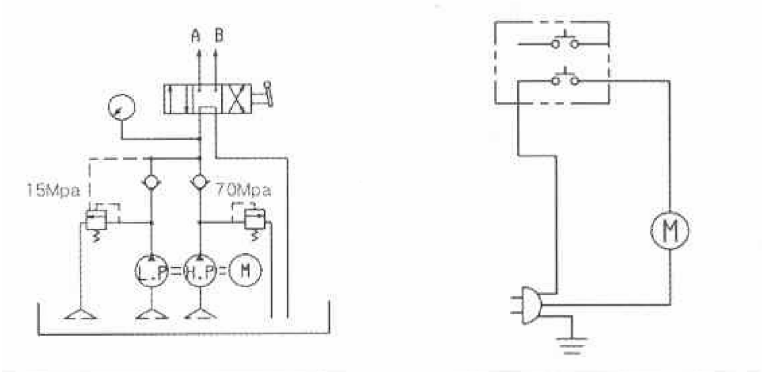

HEP103441 AN HEP103442 CIRCUITS

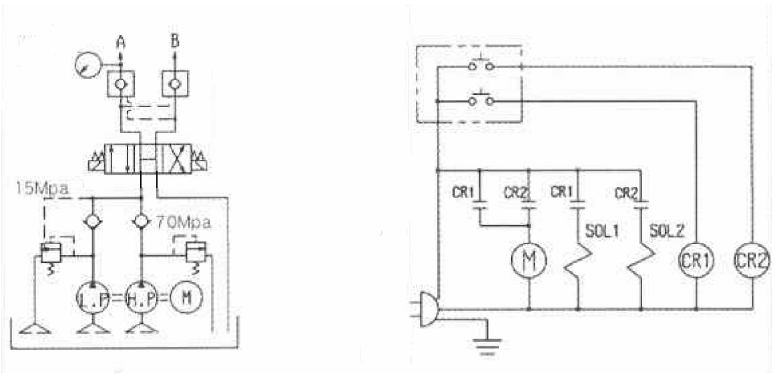

HEP103441LS AN HEP103442LS CIRCUITS

IMPORTANT

WHEN ORDERING SPARES YOU MUST STATE THE FULL PART NUMBER AND THE PRODUCT SERIAL NUMBER - FROM THE LABEL
TO PROTECT YOUR WARRANTY ALWAYS USE GENUINE HI-FORCE PARTS.