Hi-Force HYDRAULIC TOOLS	HPF50 TONNE SERIES WORKSHOP FLOOR PRESS	SERIAL NUMBERS UP TO BS8411	SPARE PARTS LIST NO. HPF50P1

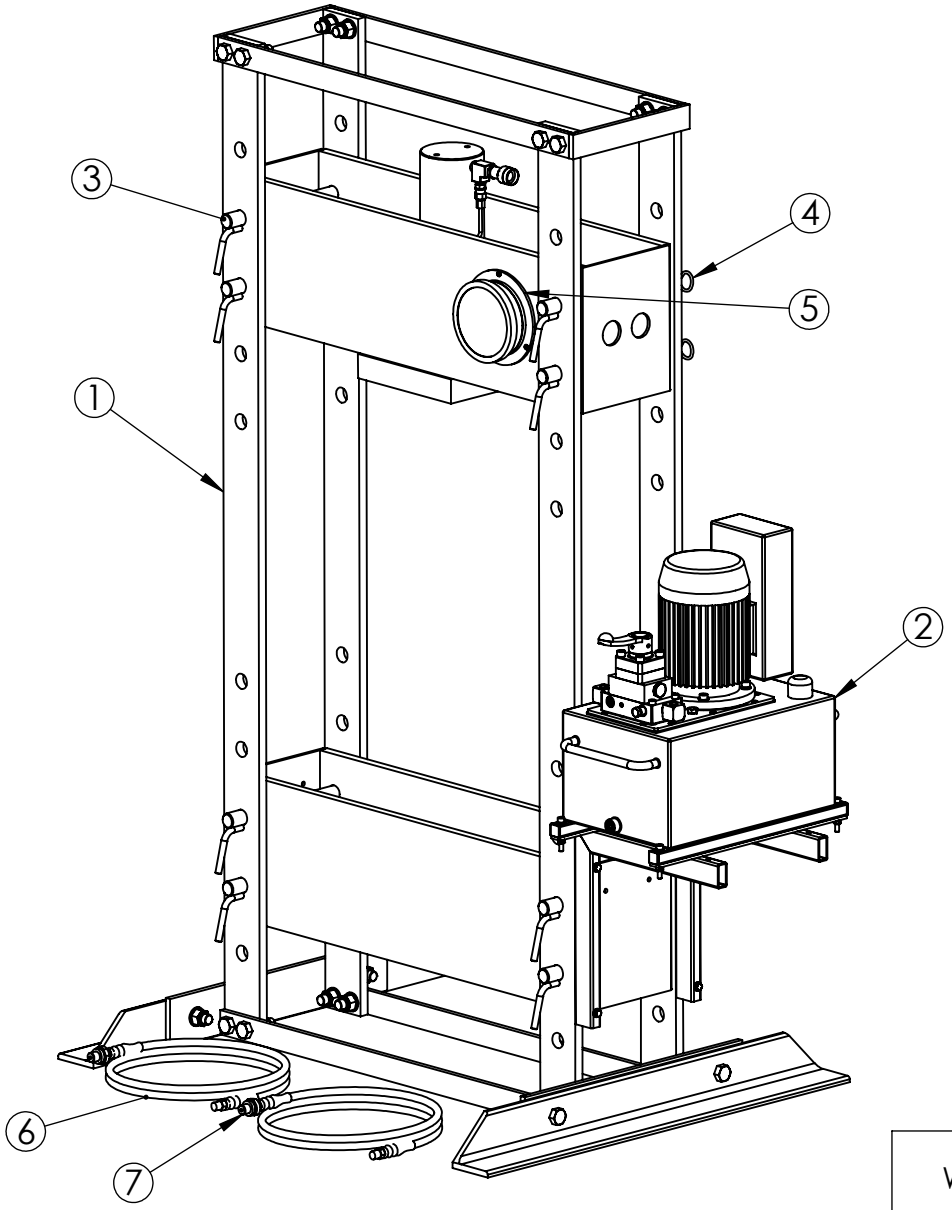

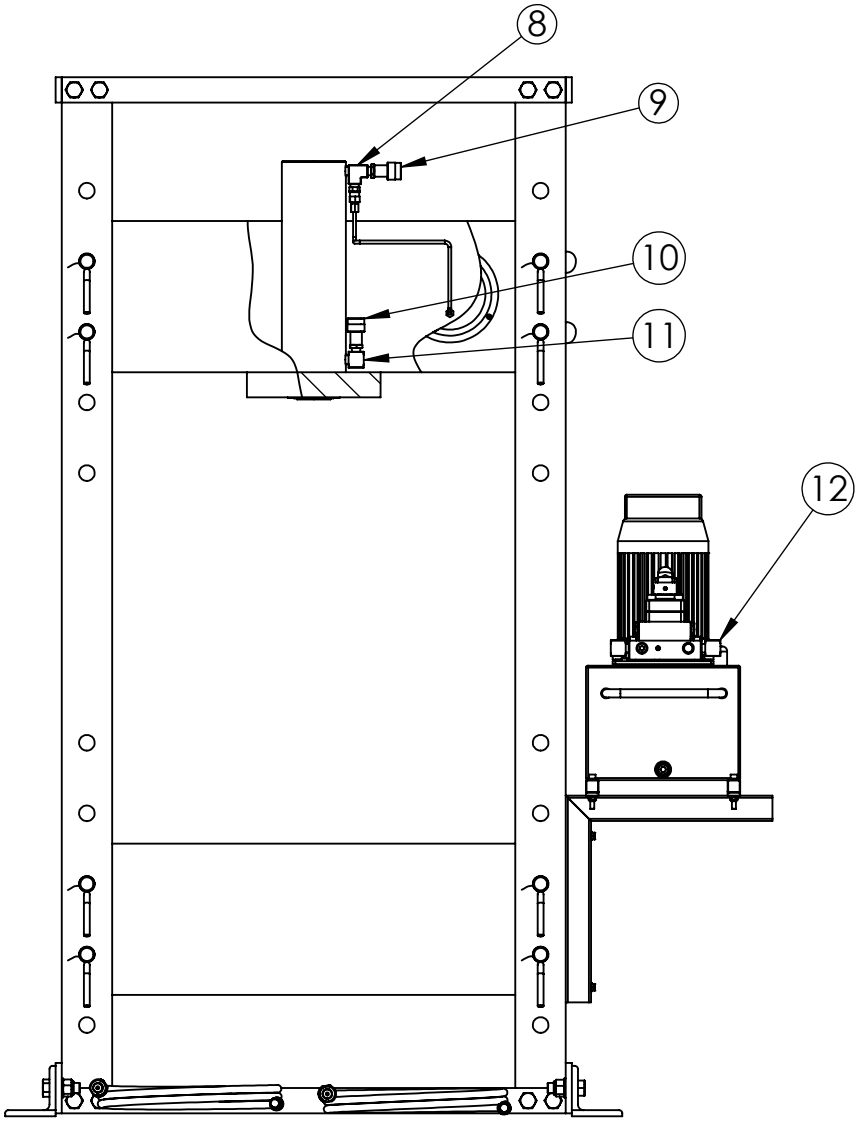

IMPORTANT

WHEN ORDERING SPARES YOU MUST STATE THE FULL PART NUMBER AND THE PRODUCT SERIAL NUMBER - FROM THE LABEL

TO PROTECT YOUR WARRANTY ALWAYS USE GENUINE HI-FORCE PARTS.

www.hi-force.com

Hi-Force HYDRAULIC TOOLS

HPF50 TONNE SERIES WORKSHOP FLOOR PRESS

SERIAL NUMBERS
UP TO BS8411

SPARE PARTS LIST NO.
HPF50P1

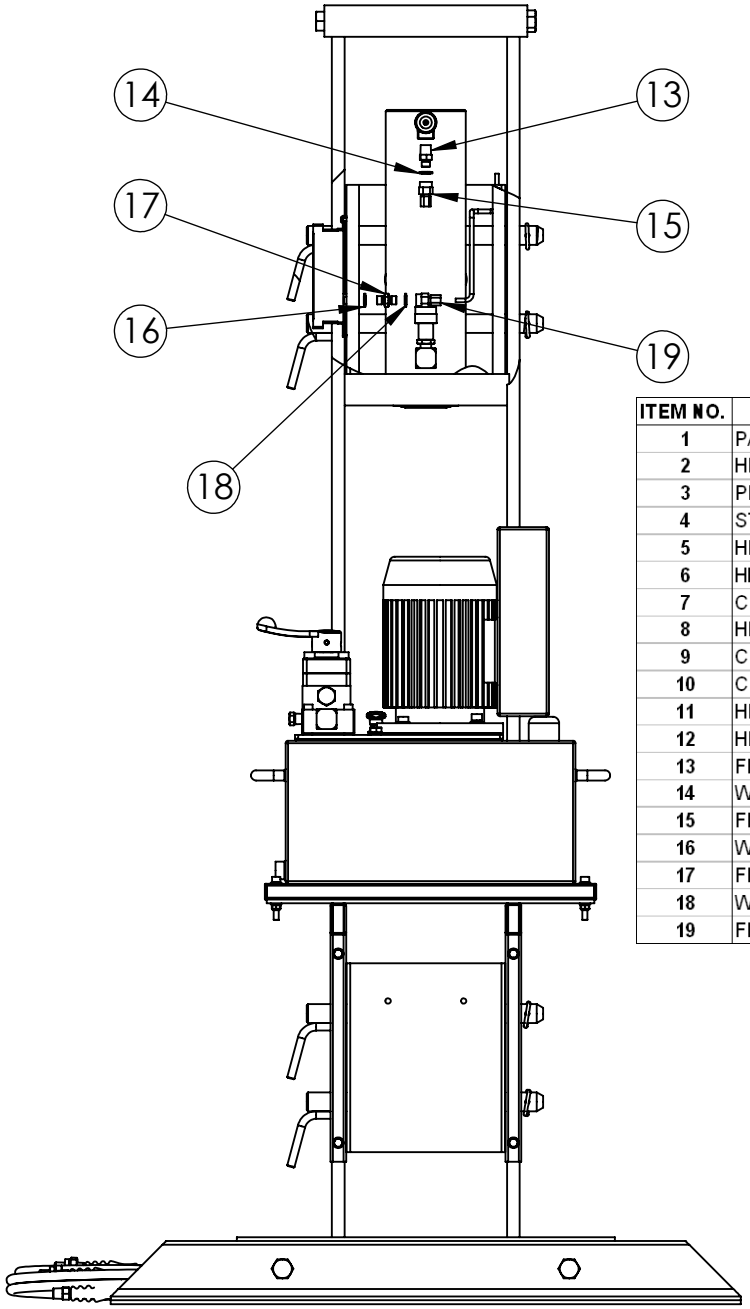

ITEM NO.	HPF5020S	HPF5020D	HPF5030S	HPF5030D	HPF5041S	HPF5041D	HPF5042S	HPF5042D	HPF5044S	HPF5044D
1	PAA050FM001	PAA050FM001	PAA050FM001	PAA050FM001	PAA050FM001	PAA050FM001	PAA050FM001	PAA050FM001	PAA050FM001	PAA050FM001
2	HP257	HP257D	AHP1121	AHP1141	HEP207311	HEP207411	HEP207312	HEP207412	HEP207314	HEP207414
3	PLC050CQ001	PLC050CQ001	PLC050CQ001	PLC050CQ001	PLC050CQ001	PLC050CQ001	PLC050CQ001	PLC050CQ001	PLC050CQ001	PLC050CQ001
4	STC030RA001	STC030RA001	STC030RA001	STC030RA001	STC030RA001	STC030RA001	STC030RA001	STC030RA001	STC030RA001	STC030RA001
5	HPG-50T	HPG-50T	HPG-50T	HPG-50T	HPG-50T	HPG-50T	HPG-50T	HPG-50T	HPG-50T	HPG-50T
6	HH3	HH3	HH3	HH3	HH3	HH3	HH3	HH3	HH3	HH3
7	CM1	CM1	CM1	CM1	CM1	CM1	CM1	CM1	CM1	CM1
8	HF31	HF31	HF31	HF31	HF31	HF31	HF31	HF31	HF31	HF31
9	CF1	CF1	CF1	CF1	CF1	CF1	CF1	CF1	CF1	CF1
10	CF1	CF1	CF1	CF1	CF1	CF1	CF1	CF1	CF1	CF1
11	HF16	HF16	HF16	HF16	HF16	HF16	HF16	HF16	HF16	HF16
12	HF16	HF16	HF16	HF16	HF16	HF16	HF16	HF16	HF16	HF16
13	FPC006YN001	FPC006YN001	FPC006YN001	FPC006YN001	FPC006YN001	FPC006YN001	FPC006YN001	FPC006YN001	FPC006YN001	FPC006YN001
14	WAC007HD000	WAC007HD000	WAC007HD000	WAC007HD000	WAC007HD000	WAC007HD000	WAC007HD000	WAC007HD000	WAC007HD000	WAC007HD000
15	FPC006WB001	FPC006WB001	FPC006WB001	FPC006WB001	FPC006WB001	FPC006WB001	FPC006WB001	FPC006WB001	FPC006WB001	FPC006WB001
16	WAC007HD000	WAC007HD000	WAC007HD000	WAC007HD000	WAC007HD000	WAC007HD000	WAC007HD000	WAC007HD000	WAC007HD000	WAC007HD000
17	FPC006QB003	FPC006QB003	FPC006QB003	FPC006QB003	FPC006QB003	FPC006QB003	FPC006QB003	FPC006QB003	FPC006QB003	FPC006QB003
18	WAC007HD000	WAC007HD000	WAC007HD000	WAC007HD000	WAC007HD000	WAC007HD000	WAC007HD000	WAC007HD000	WAC007HD000	WAC007HD000
19	FPC006WB001	FPC006WB001	FPC006WB001	FPC006WB001	FPC006WB001	FPC006WB001	FPC006WB001	FPC006WB001	FPC006WB001	FPC006WB001

IMPORTANT

WHEN ORDERING SPARES YOU MUST STATE THE FULL PART NUMBER AND THE PRODUCT SERIAL NUMBER - FROM THE LABEL
TO PROTECT YOUR WARRANTY ALWAYS USE GENUINE HI-FORCE PARTS.

www.hi-force.com

Hi-Force HYDRAULIC TOOLS	SPRING RETURN CYLINDER HSS5013	SERIAL NUMBERS UP TO BS8411	SPARE PARTS LIST NO. HSS5013P1

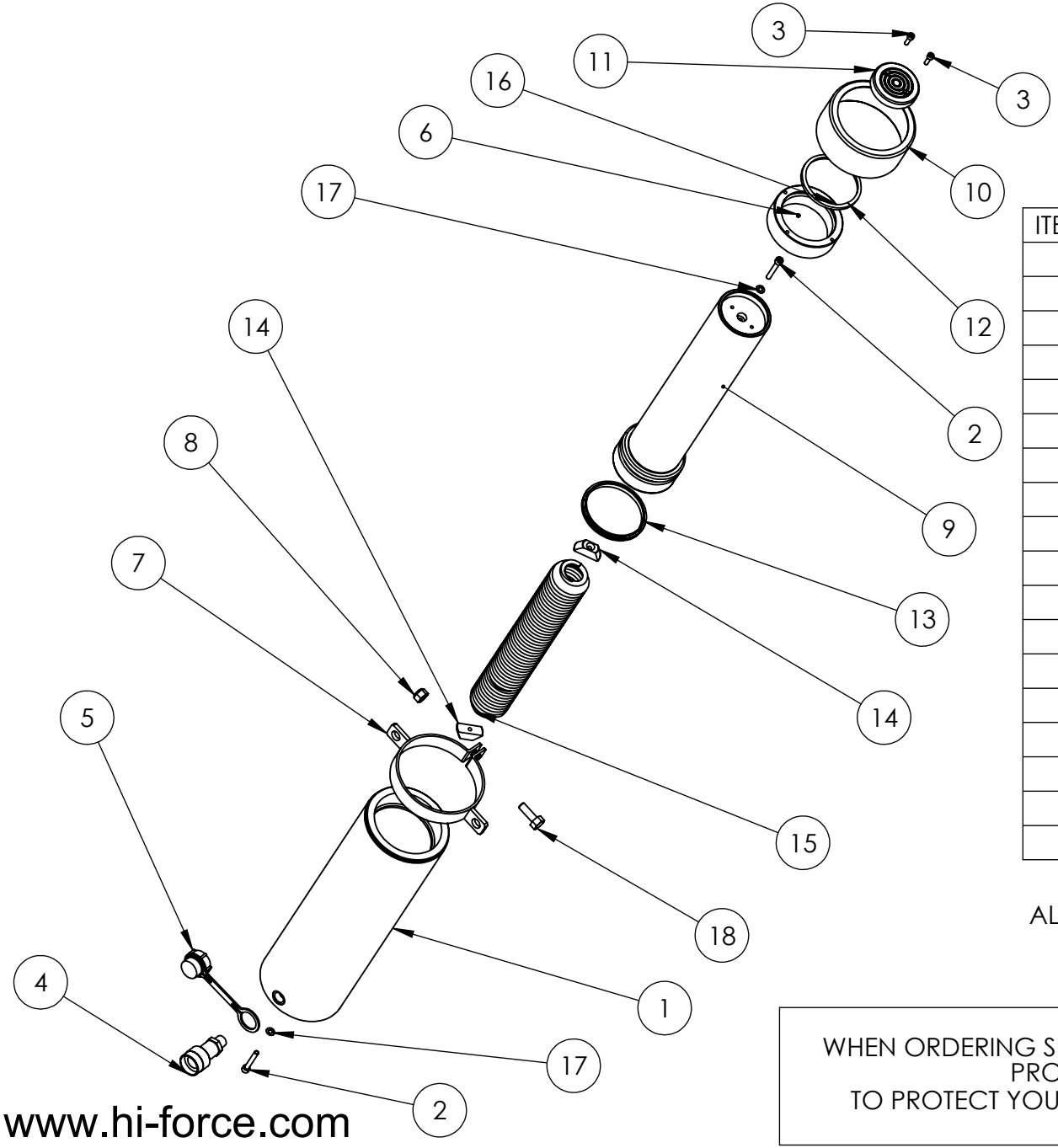

ITEM NO.	PART NUMBER	DESCRIPTION	QTY.
1	CBC095SN001	CYLINDER.	1
2	BLC006JC040	CAP HD SCREW	2
3	BLC005HD016	CAP HD SCREW	2
4	CF1	COUPLER	1
5	BPC030PP001	DUST COVER	1
6	FFC004RC001	FILTER	1
7	FLC127LA002	LIFTING RING	1
8	NUC010LC000	NUT	1
9	PRC095BN001	PISTON	1
10	PTP127TP050	THREAD PROTECTOR	1
11	SAC070EC001	SADDLE.	1
12	X	WIPER	1
13	X	PISTON SEAL	1
14	SIC015ED001	INSERT	2
15	SPC058TP002	TENSION SPRING	1
16	SRC079SJ001	STOP RING.	1
17	X	WASHER	2
18	BLC010LB030	BOLT	1

ALL ITEMS MARKED 'X' SUPPLIED IN KIT HSS50TP1-K ONLY.

IMPORTANT

WHEN ORDERING SPARES YOU MUST STATE THE FULL PART NUMBER AND THE PRODUCT SERIAL NUMBER - FROM THE LABEL
TO PROTECT YOUR WARRANTY ALWAYS USE GENUINE HI-FORCE PARTS.

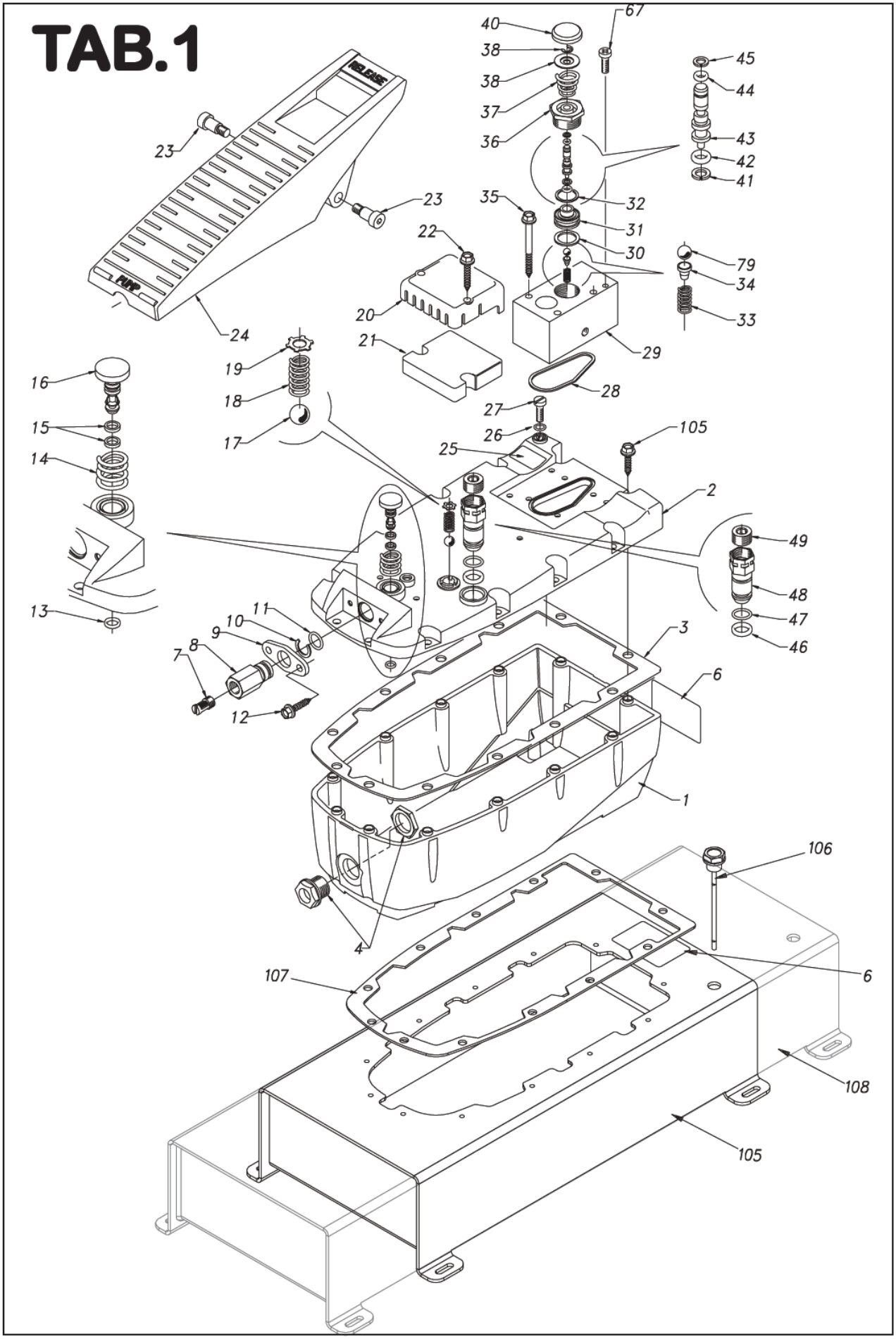
TAB.1
RELEASE
PUMP
40
38
38
37
36
67
45
44
43
42
41
23
23
35
32
31
30
22
79
34
33
20
21
29
24
19
18
17
28
27
26
25
105
2
16
15
14
13
49
48
47
46
11
10
9
8
7
12
3
6
1
106
4
107
6
108
105

TAB.2

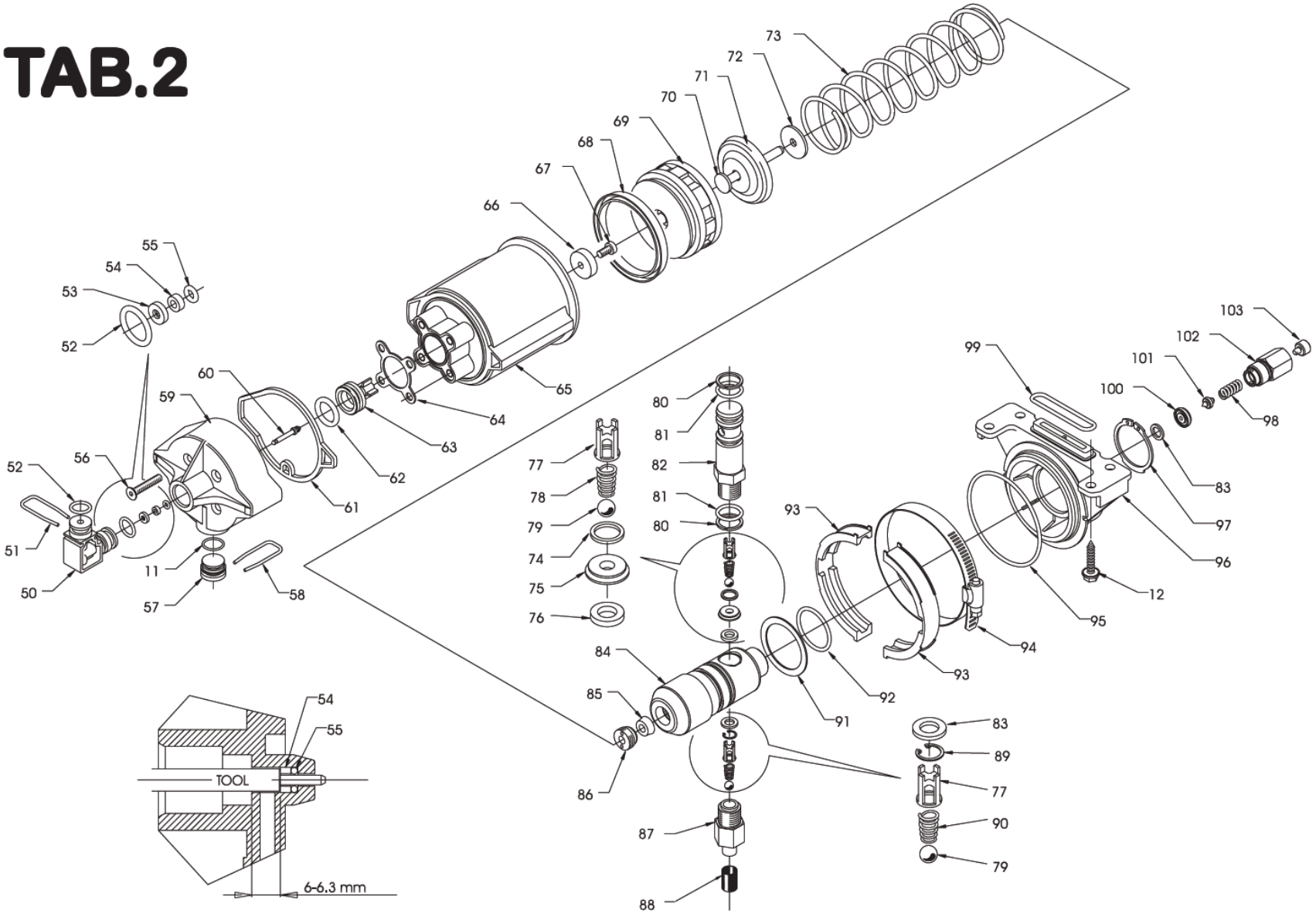

Hi-Force®

Table 1 / Drawing 1			Table 2 / Drawing 2		
Pos	Description	Part number	Pos	Description	Part number
1	Reservoir 2,5 litre – Gray	309310030	11	O-ring	425830021
1	Reservoir 2,5 litre – Black	309310031	12	Thread form screw	426446355
2	Cover – blue	182840010	50	Cover head adapter	309040010
2	Cover – black	182840011	51	Locking adapter staple	141070010
3	Cover seal AHP 2,5 litre	139220110	52	O-ring	425830084
4	Oil lever 2,5 litre	301100020	53	Seal	139200010
6	Identification label	193515051	54	Bushing	116010010
7	Air filter	139110010	55	O-ring	425830006
8	Swivel coupler	128690040	56	Screw M5x0.8x25	426116057
9	Swivel coupler flange	147010010	57	Head plug	182050030
10	Retaining ring	427270140	58	Locking head staple	141070020
11	O-ring	425830021	59	Head	184000060
12	Thread forming screw	426446355	60	Plunger	102170010
13	O-ring	425831074	61	Seal	139200050
14	Beginning cycle pin spring	151050300	62	U-cup	425121044
15	Quad ring	425880020	63	Piston	160900020
16	Pin	102130090	64	Seal	139220090
17	Quad ball	428630070	65	Cylinder	309000020
18	Relief valve spring	151050320	66	Washer seal	141480030
19	Cogged retaining ring	427260040	67	Screw	426310137
20	Foam tube cover	182840020	68	Seal	425620210
21	Foam tube	139220120	69	Piston	160900010
22	Thread forming screw	426446385	70	Piston	160900040
23	Foot pedal att. screw	196020030	71	Spring washer	141500120
24	Foot pedal	110000040	72	Bumper	139220030
25	Reservoir ventilation label	193515053	73	Spring	151050310
26	O-ring	425830011	74	Copper washer	451430007
27	Screw	426321170	75	Feed pin seat	172150040
28	O-ring	425830045	76	Copper washer	451436006
29	Drive adjusting block	142100080	77	Ball guide	150050020
30	Copper washer	451435045	78	Spring	151100090
31	Release valve seat	172150150	79	Ball	428620042
32	Copper washer	451435038	80	BK-ring	425784034
33	Spring	151050330	81	O-ring	425837022
34	Ball guide spring	150060060	82	Plunger	102040030
35	Thread forming screw	426446406	83	Copper washer	451435006
36	Release guide	131050080	84	Body	131050090
37	Spring	151100030	85	Seal	425000021
38	Spring washer	141500130	86	Piston guide head	184000030
39	Retaining ring	427180050	87	Suction filter adapter	128510021
40	Plunger cover	182880020	88	Oil filter	139000010
41	BK-ring	425784018	89	Retaining ring	427160090
42	O-ring	425830009	90	Spring	151100100
43	Plunger	102150030	91	Spring seat washer	141500110
44	O-ring	425830007	92	O-ring	425830108
45	BK-ring	425784014	93	Strap support	177000030
46	O-ring	425830086	94	Standard pipe clamp	427102100
47	O-ring	425830024	95	O-ring	425830136
48	Filter plug	128690050	96	Cover	147130020
49	Taper plug	426620250	97	Retaining ring	427150350
67	Screw	426310137	98	Peak valve spring	151050030
79	Ball	428620042	99	Seal	425000110
104	PTFE ring	141440010	100	Valve seat	172150030
105	Reservoir AHP 5 litre	305170010	101	Spear valve	182260010
106	Oil level 5 litre	428400011	102	Peak valve adapter	128630040
107	Cover seal AHP 5 litre	139220116	103	Peak valve spring	141400070
108	Reservoir AHP 7 litre	305170020	Seal kit AHP 1120: 800050070 – AHP 1121: 800050110		