Hi-Force HYDRAULIC TOOLS	HPF50 TONNE SERIES WORKSHOP FLOOR PRESS	SERIAL NUMBERS UP TO BS8411	SPARE PARTS LIST NO. HPF50P1

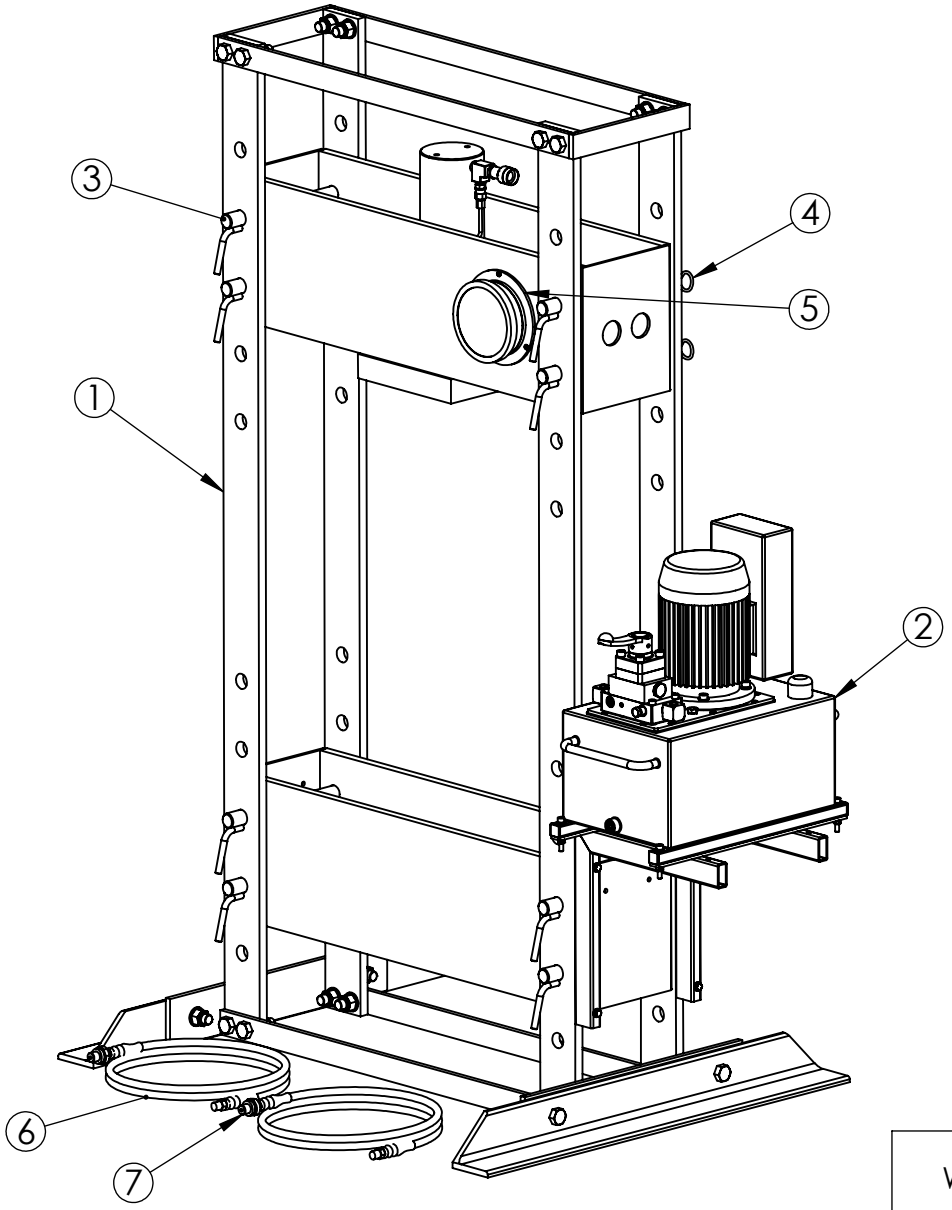

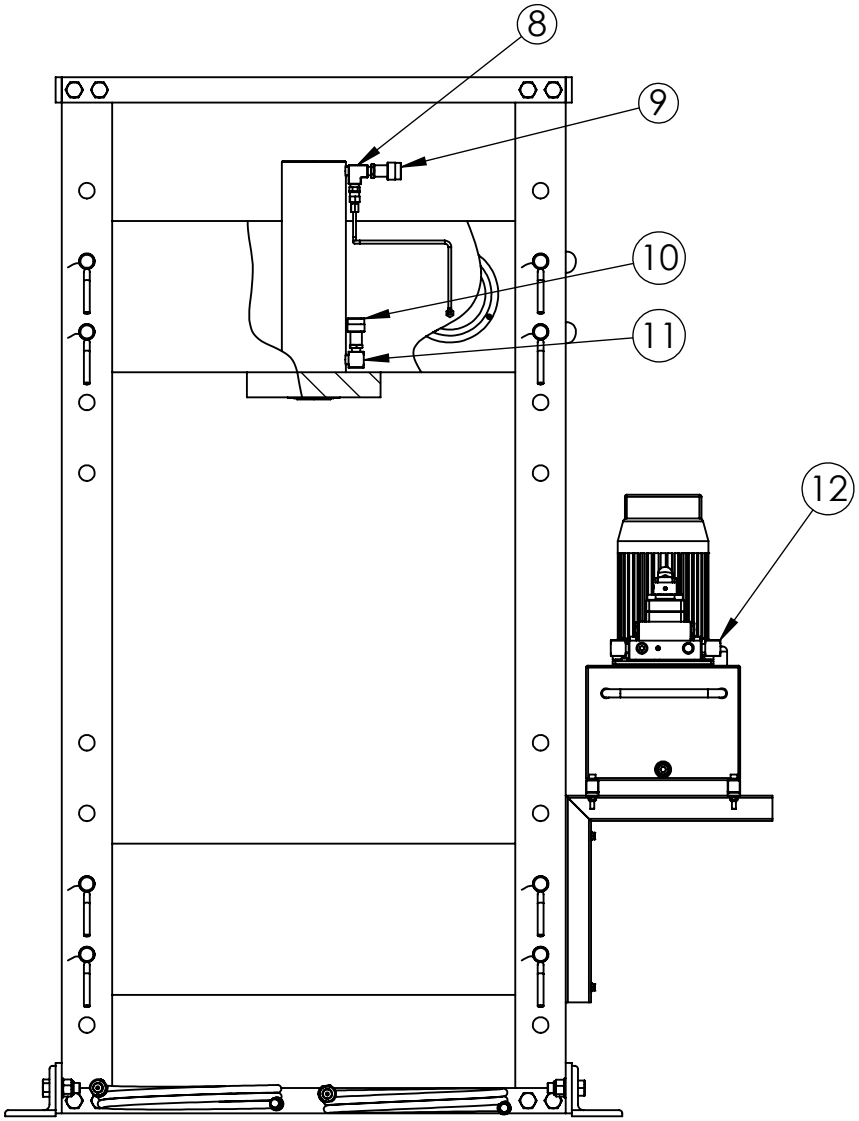

IMPORTANT

WHEN ORDERING SPARES YOU MUST STATE THE FULL PART NUMBER AND THE PRODUCT SERIAL NUMBER - FROM THE LABEL

TO PROTECT YOUR WARRANTY ALWAYS USE GENUINE HI-FORCE PARTS.

www.hi-force.com

Hi-Force HYDRAULIC TOOLS

HPF50 TONNE SERIES WORKSHOP FLOOR PRESS

SERIAL NUMBERS
UP TO BS8411

SPARE PARTS LIST NO.
HPF50P1

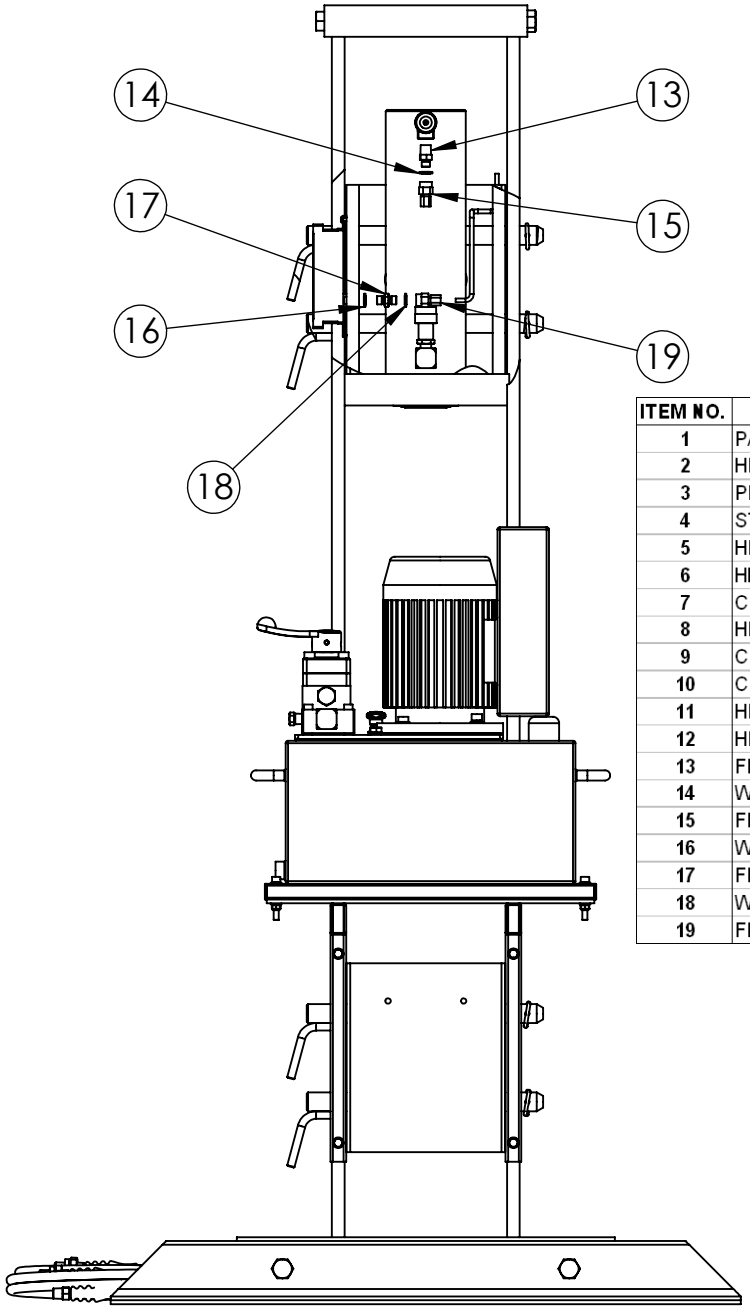

ITEM NO.	HPF5020S	HPF5020D	HPF5030S	HPF5030D	HPF5041S	HPF5041D	HPF5042S	HPF5042D	HPF5044S	HPF5044D
1	PAA050FM001	PAA050FM001	PAA050FM001	PAA050FM001	PAA050FM001	PAA050FM001	PAA050FM001	PAA050FM001	PAA050FM001	PAA050FM001
2	HP257	HP257D	AHP1121	AHP1141	HEP207311	HEP207411	HEP207312	HEP207412	HEP207314	HEP207414
3	PLC050CQ001	PLC050CQ001	PLC050CQ001	PLC050CQ001	PLC050CQ001	PLC050CQ001	PLC050CQ001	PLC050CQ001	PLC050CQ001	PLC050CQ001
4	STC030RA001	STC030RA001	STC030RA001	STC030RA001	STC030RA001	STC030RA001	STC030RA001	STC030RA001	STC030RA001	STC030RA001
5	HPG-50T	HPG-50T	HPG-50T	HPG-50T	HPG-50T	HPG-50T	HPG-50T	HPG-50T	HPG-50T	HPG-50T
6	HH3	HH3	HH3	HH3	HH3	HH3	HH3	HH3	HH3	HH3
7	CM1	CM1	CM1	CM1	CM1	CM1	CM1	CM1	CM1	CM1
8	HF31	HF31	HF31	HF31	HF31	HF31	HF31	HF31	HF31	HF31
9	CF1	CF1	CF1	CF1	CF1	CF1	CF1	CF1	CF1	CF1
10	CF1	CF1	CF1	CF1	CF1	CF1	CF1	CF1	CF1	CF1
11	HF16	HF16	HF16	HF16	HF16	HF16	HF16	HF16	HF16	HF16
12	HF16	HF16	HF16	HF16	HF16	HF16	HF16	HF16	HF16	HF16
13	FPC006YN001	FPC006YN001	FPC006YN001	FPC006YN001	FPC006YN001	FPC006YN001	FPC006YN001	FPC006YN001	FPC006YN001	FPC006YN001
14	WAC007HD000	WAC007HD000	WAC007HD000	WAC007HD000	WAC007HD000	WAC007HD000	WAC007HD000	WAC007HD000	WAC007HD000	WAC007HD000
15	FPC006WB001	FPC006WB001	FPC006WB001	FPC006WB001	FPC006WB001	FPC006WB001	FPC006WB001	FPC006WB001	FPC006WB001	FPC006WB001
16	WAC007HD000	WAC007HD000	WAC007HD000	WAC007HD000	WAC007HD000	WAC007HD000	WAC007HD000	WAC007HD000	WAC007HD000	WAC007HD000
17	FPC006QB003	FPC006QB003	FPC006QB003	FPC006QB003	FPC006QB003	FPC006QB003	FPC006QB003	FPC006QB003	FPC006QB003	FPC006QB003
18	WAC007HD000	WAC007HD000	WAC007HD000	WAC007HD000	WAC007HD000	WAC007HD000	WAC007HD000	WAC007HD000	WAC007HD000	WAC007HD000
19	FPC006WB001	FPC006WB001	FPC006WB001	FPC006WB001	FPC006WB001	FPC006WB001	FPC006WB001	FPC006WB001	FPC006WB001	FPC006WB001

IMPORTANT

WHEN ORDERING SPARES YOU MUST STATE THE FULL PART NUMBER AND THE PRODUCT SERIAL NUMBER - FROM THE LABEL
TO PROTECT YOUR WARRANTY ALWAYS USE GENUINE HI-FORCE PARTS.

www.hi-force.com

Hi-Force HYDRAULIC TOOLS	SPRING RETURN CYLINDER HSS5013	SERIAL NUMBERS UP TO BS8411	SPARE PARTS LIST NO. HSS5013P1

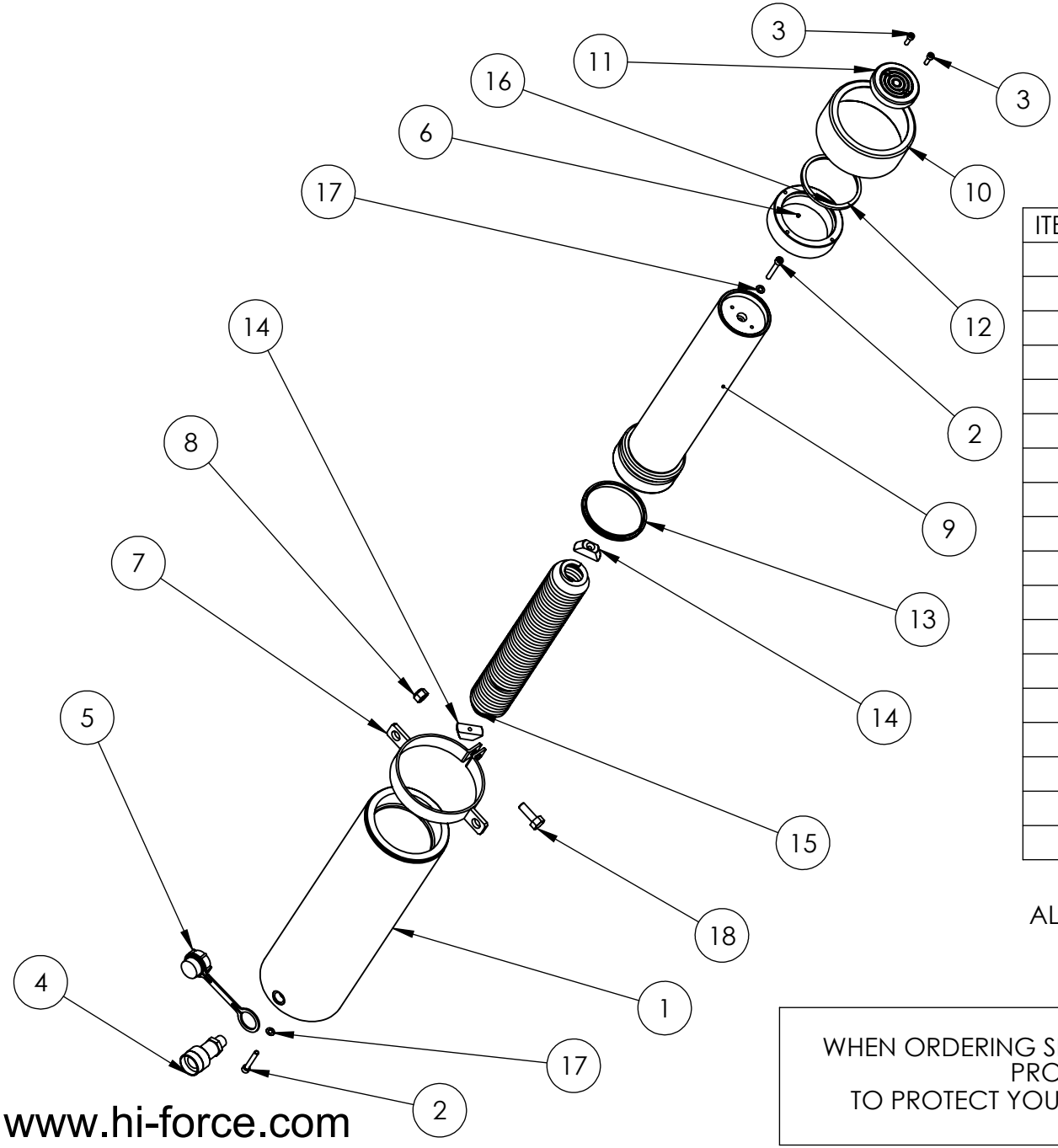

ITEM NO.	PART NUMBER	DESCRIPTION	QTY.
1	CBC095SN001	CYLINDER.	1
2	BLC006JC040	CAP HD SCREW	2
3	BLC005HD016	CAP HD SCREW	2
4	CF1	COUPLER	1
5	BPC030PP001	DUST COVER	1
6	FFC004RC001	FILTER	1
7	FLC127LA002	LIFTING RING	1
8	NUC010LC000	NUT	1
9	PRC095BN001	PISTON	1
10	PTP127TP050	THREAD PROTECTOR	1
11	SAC070EC001	SADDLE.	1
12	X	WIPER	1
13	X	PISTON SEAL	1
14	SIC015ED001	INSERT	2
15	SPC058TP002	TENSION SPRING	1
16	SRC079SJ001	STOP RING.	1
17	X	WASHER	2
18	BLC010LB030	BOLT	1

ALL ITEMS MARKED 'X' SUPPLIED IN KIT HSS50TP1-K ONLY.

IMPORTANT

WHEN ORDERING SPARES YOU MUST STATE THE FULL PART NUMBER AND THE PRODUCT SERIAL NUMBER - FROM THE LABEL
TO PROTECT YOUR WARRANTY ALWAYS USE GENUINE HI-FORCE PARTS.

Hi-Force HYDRAULIC TOOLS	HEP2 ELECTRIC DRIVEN PUMP.	SERIAL NUMBERS UP TO BS8411	SPARE PARTS LIST NO. HEP2P1

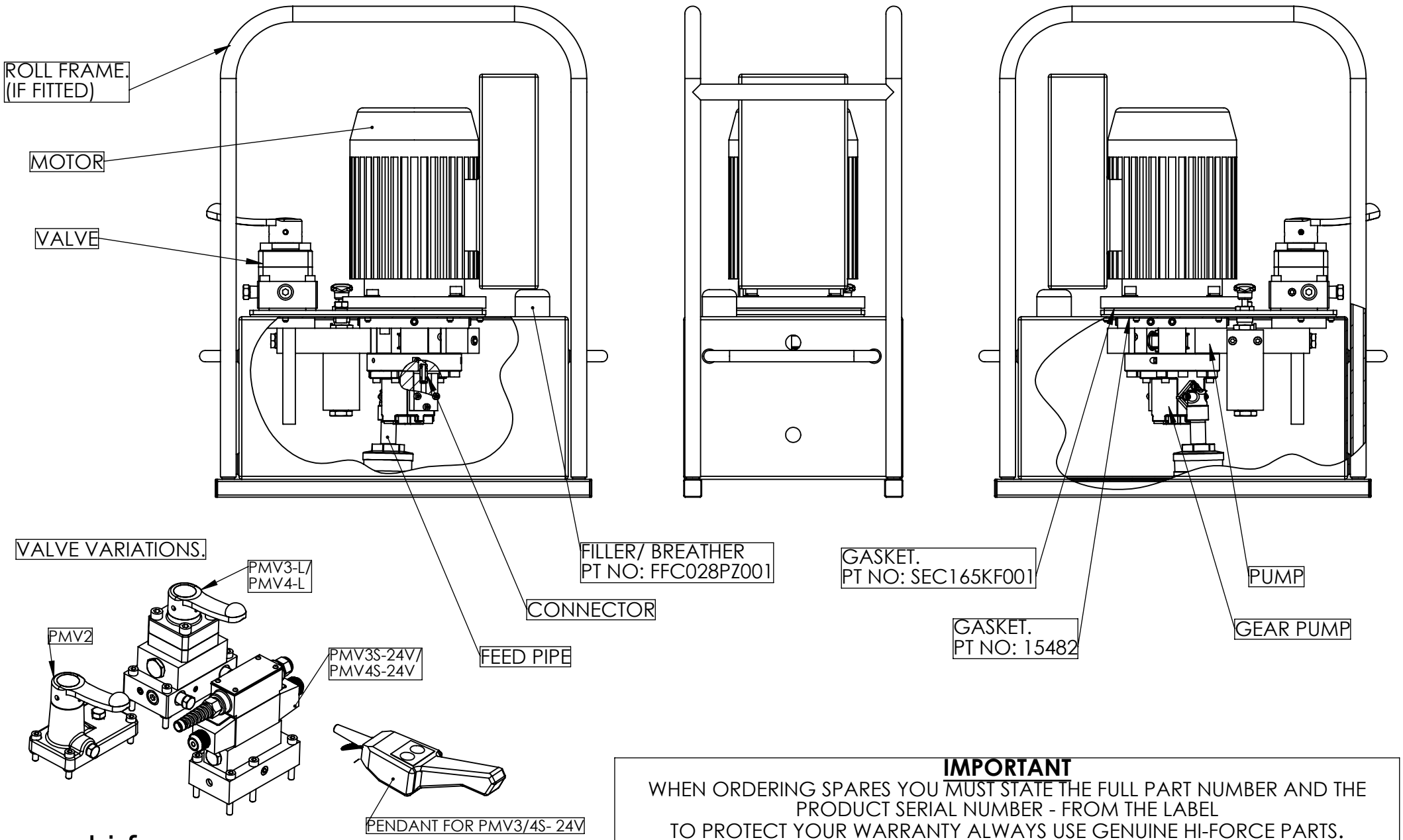

IMPORTANT

WHEN ORDERING SPARES YOU MUST STATE THE FULL PART NUMBER AND THE PRODUCT SERIAL NUMBER - FROM THE LABEL

TO PROTECT YOUR WARRANTY ALWAYS USE GENUINE HI-FORCE PARTS.

www.hi-force.com

Hi-Force HYDRAULIC TOOLS	VALVE ASSEMBLY 3 WAY PMV3	SERIAL NUMBERS UP TO BS8411	SPARE PARTS LIST NO. PMV3P1

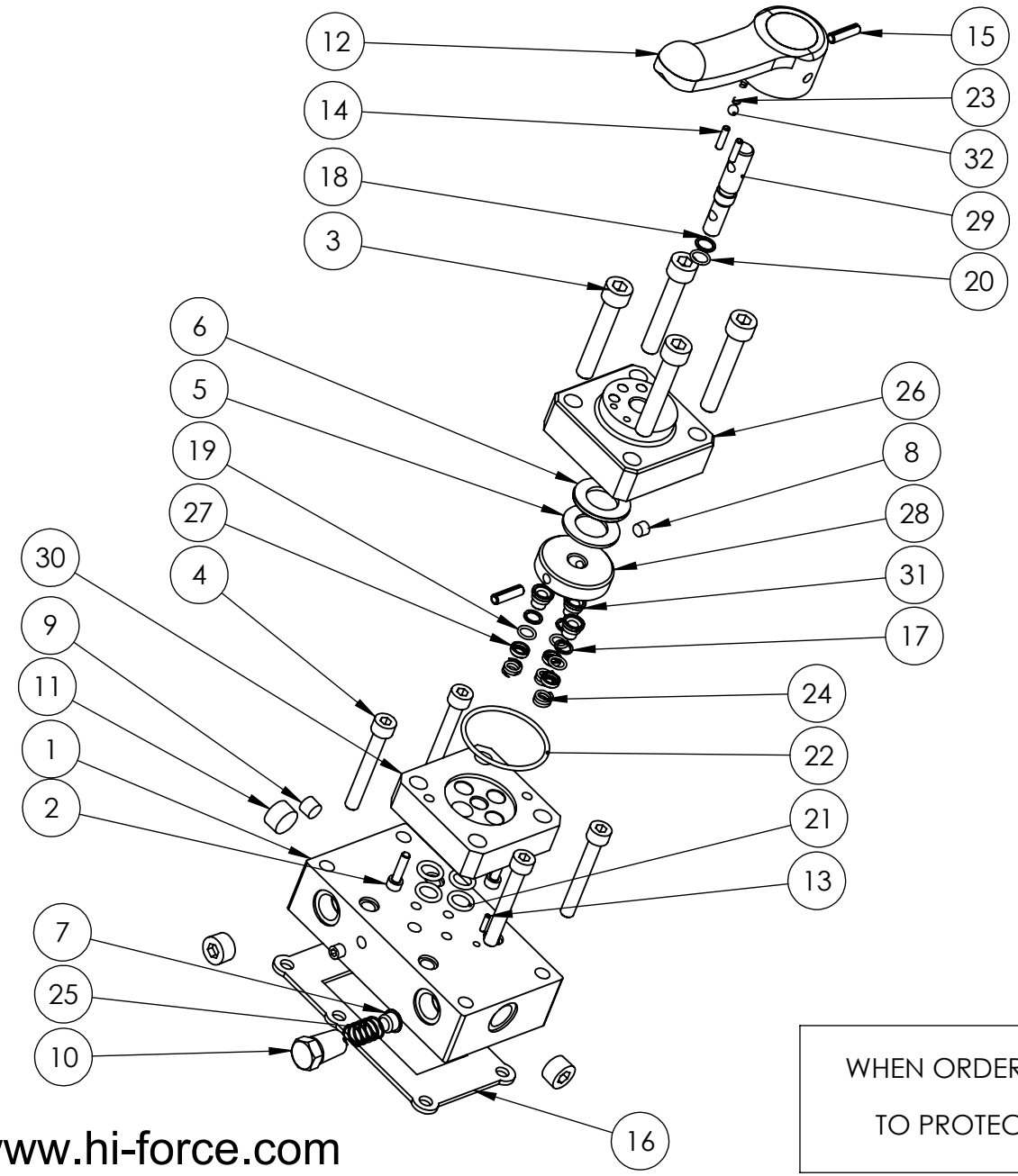

ITEM NO.	PART NUMBER	DESCRIPTION	QTY.
1	VFC010BF007	VALVE MOUNTING BLOCK	1
2	BLC005HU020	CAP HD SCREW	2
3	BLC010LC060	CAP HD SCREW	4
4	BLC008KC060	CAP HD SCREW	4
5	BSC035NA001	NEEDLE BEARING	1
6	BSC035NA002	HOUSING WASHER	1
7	FFC011MG001	LAST CHANCE FILTER	1
8	FPC002PN001	PLUG	2
9	FPC003PN001	PLUG	1
10	FPC010PN001	3/8 NPT BLANKING PLUG	1
11	FPC010PN002	3/8 X 7/8 IN. NPT SOCKET PLUG	3
12	HLC012LP002	HANDLE	1
13	PCC003RB006	SPRING PIN	1
14	PCC004RC001	SPRING PIN	2
15	PCC006RD000	SPRING PIN	2
16	X	GASKET	1
17	X	BACK UP RING	3
18	X	BACK UP RING	1
19	X	O - RING	3
20	X	O - RING	1
21	X	O - RING	4
22	X	O - RING	1
23	SPC005CA001	SPRING	1
24	SPC010CA001	SPRING	3
25	SPC014LC001	COMPRESSION SPRING FOR FILTER	1
26	VFC000BD003	VALVE BODY	1
27	VFC000SC001	SHEAR SEAL COLLAR	3
28	VFC000SQ002	VALVE ROTOR	1
29	VFC000SR002	SPINDLE	1
30	VFC000ST001	SHEAR SEAL PLATE	1
31	VFC000SU001	SHEAR SEAL	3
32	X	6 mm BALL	1

ALL PARTS MARKED 'X' SUPPLIED IN KIT PMV4TP1-K ONLY.

IMPORTANT

WHEN ORDERING SPARES YOU MUST STATE THE FULL PART NUMBER AND THE PRODUCT SERIAL NUMBER - FROM THE LABEL
TO PROTECT YOUR WARRANTY ALWAYS USE GENUINE HI-FORCE PARTS.

Hi-Force HYDRAULIC TOOLS	VALVE ASSEMBLY 3 WAY PMV3S-24V	SERIAL NUMBERS UP TO BS8411	SPARE PARTS LIST NO. PMV3S-24V

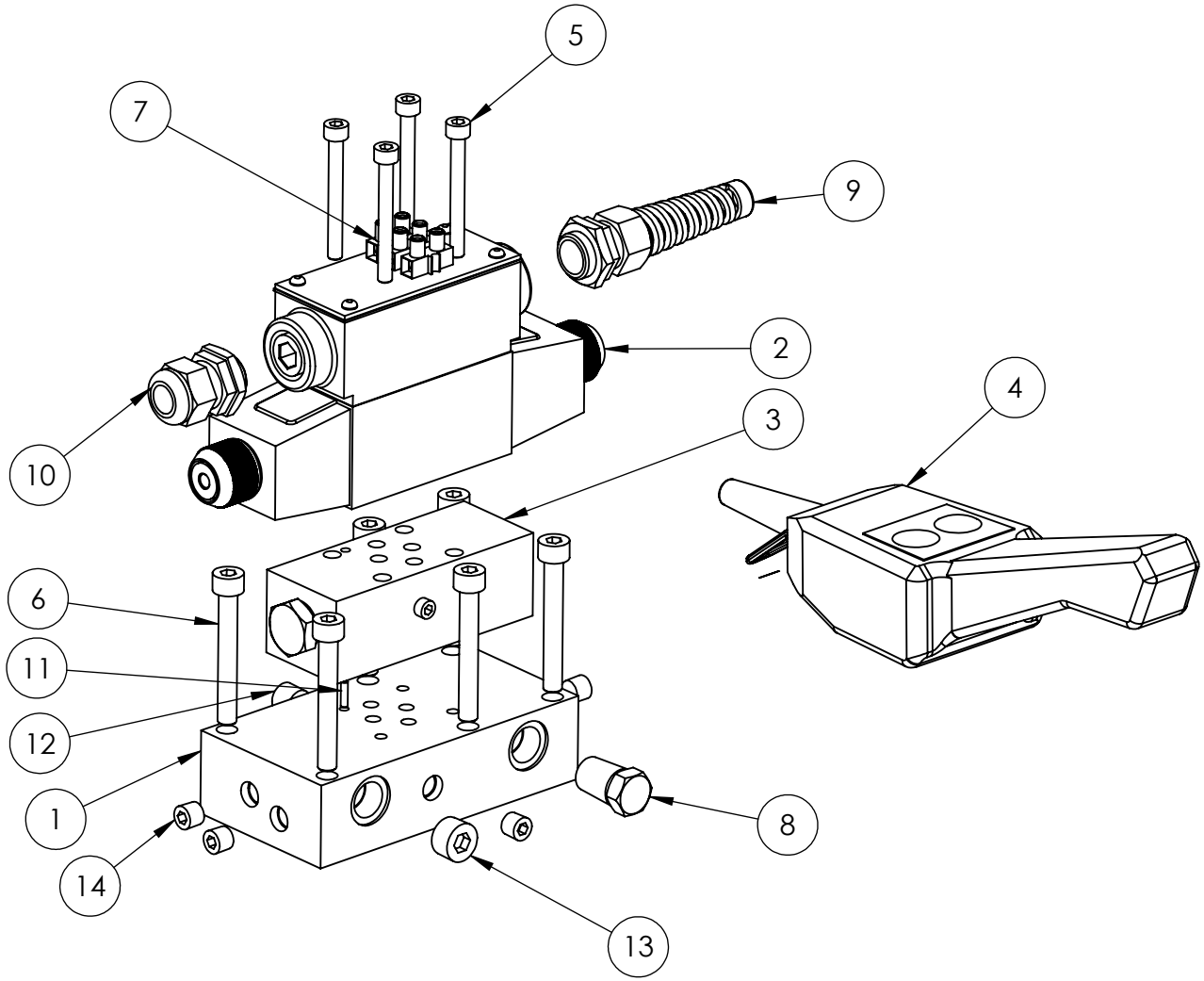

ITEM NO.	PART NUMBER	DESCRIPTION	QTY.
1	VFC010BT002	HI- FORCE VALVE BASE.	1
2	VFA000CE001	4 WAY D/A SOL. VALVE 24V	1
3	V8480	DUAL P.O CHECK VALVE	1
4	5020A	HAND PENDANT	1
5	BLC006FC055	CAP HD SCREW	4
6	BLC008KC060	CAP HD SCREW	6
7	EMC000NE001	CONNECTOR BLOCK 6MM	1
8	FPC010PN001	3/8 NPT BLANKING PLUG	1
9	NUC020LS001	FLEXIBLE CABLE GLAND.	1
10	NUC020LS002	GLAND 6- 12MM	1
11	PCC003RB006	SPRING PIN	1
12	FPC006PN001	PLUG	1
13	FPC010PN002	3/8 X 7/8 IN. NPT SOCKET PLUG	1
14	FPC003PN001	PLUG	4

IMPORTANT

WHEN ORDERING SPARES YOU MUST STATE THE FULL PART NUMBER AND THE PRODUCT SERIAL NUMBER - FROM THE LABEL

TO PROTECT YOUR WARRANTY ALWAYS USE GENUINE HI-FORCE PARTS.

www.hi-force.com

Hi-Force HYDRAULIC TOOLS	VALVE ASSEMBLY 3 WAY PMV3-L	SERIAL NUMBERS UP TO BS8411	SPARE PARTS LIST NO. PMV3-LP1

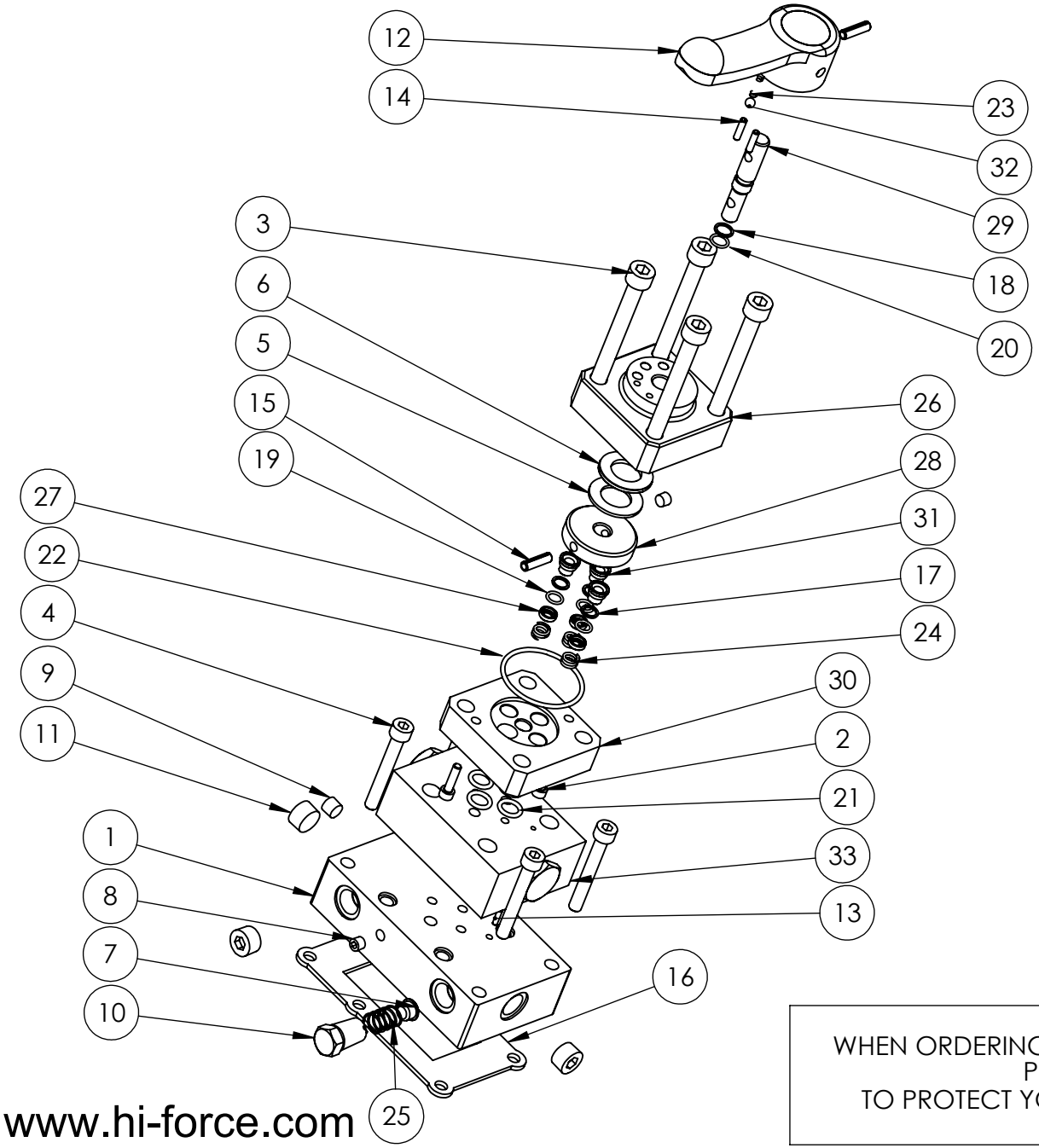

ITEM NO.	PART NUMBER	DESCRIPTION	QTY.
1	VFC010BF007	VALVE MOUNTING BLOCK	1
2	BLC005HU020	CAP HD SCREW	2
3	BLC010LC100	CAP HD SCREW	4
4	BLC008KC060	CAP HD SCREW	4
5	BSC035NA001	NEEDLE BEARING	1
6	BSC035NA002	HOUSING WASHER	1
7	FFC011MG001	LAST CHANCE FILTER	1
8	FPC002PN001	PLUG	2
9	FPC003PN001	PLUG	1
10	FPC010PN001	3/8 NPT BLANKING PLUG	1
11	FPC010PN002	3/8 X 7/8 IN. NPT SOCKET PLUG	3
12	HLC012LP002	HANDLE	1
13	PCC003RB006	SPRING PIN	1
14	PCC004RC001	SPRING PIN	2
15	PCC006RD000	SPRING PIN	2
16	X	GASKET	1
17	X	BACK UP RING	3
18	X	BACK UP RING	1
19	X	O - RING	3
20	X	O - RING	1
21	X	O - RING	4
22	X	O - RING	1
23	SPC005CA001	SPRING	1
24	SPC010CA001	SPRING	3
25	SPC014LC001	COMPRESSION SPRING FOR FILTER	1
26	VFC000BD003	VALVE BODY	1
27	VFC000SC001	SHEAR SEAL COLLAR	3
28	VFC000SQ002	VALVE ROTOR	1
29	VFC000SR002	SPINDLE	1
30	VFC000ST001	SHEAR SEAL PLATE	1
31	VFC000SU001	SHEAR SEAL	3
32	X	6 mm BALL	1
33	V-8470	DUAL CHECK VALVE	1

ALL PARTS MARKED 'X' SUPPLIED IN KIT PMV4TP1-K ONLY

IMPORTANT

WHEN ORDERING SPARES YOU MUST STATE THE FULL PART NUMBER AND THE PRODUCT SERIAL NUMBER - FROM THE LABEL
TO PROTECT YOUR WARRANTY ALWAYS USE GENUINE HI-FORCE PARTS.

Hi-Force HYDRAULIC TOOLS	HEP2 ELECTRIC DRIVEN PUMP	SERIAL NUMBERS UP TO BS8411	SPARE PARTS LIST NO. HEP2P1

MODEL					PUMP	VALVE	TANK	MOTOR	GEAR PUMP	CONNECTOR	FEED PIPE
HEP207	1	1	1		TYPE200-24	PM1	PPR10	EM110/1.5/4	GP48	15510B	FPC013NC001, FPC013FC001
HEP207	1	1	2		TYPE200-24	PM1	PPR10	EM240/1.5/4	GP48	15510B	FPC013NC001, FPC013FC001
HEP207	1	1	4		TYPE200-24	PM1	PPR10	EM415/1.5/4	GP48	15510B	FPC013NC001, FPC013FC001
HEP207	1	2	1		TYPE200-24	PM1	PPR25	EM110/1.5/4	GP48	15510B	FPC013AC001
HEP207	1	2	2		TYPE200-24	PM1	PPR25	EM240/1.5/4	GP48	15510B	FPC013AC001
HEP207	1	2	4		TYPE200-24	PM1	PPR25	EM415/1.5/4	GP48	15510B	FPC013AC001
HEP207	2	1	1		TYPE200-24	PMV2	PPR10	EM110/1.5/4	GP48	15510B	FPC013NC001, FPC013FC001
HEP207	2	1	2		TYPE200-24	PMV2	PPR10	EM240/1.5/4	GP48	15510B	FPC013NC001, FPC013FC001
HEP207	2	1	4		TYPE200-24	PMV2	PPR10	EM415/1.5/4	GP48	15510B	FPC013NC001, FPC013FC001
HEP207	2	2	1		TYPE200-24	PMV2	PPR25	EM110/1.5/4	GP48	15510B	FPC013AC001
HEP207	2	2	2		TYPE200-24	PMV2	PPR25	EM240/1.5/4	GP48	15510B	FPC013AC001
HEP207	2	2	4		TYPE200-24	PMV2	PPR25	EM415/1.5/4	GP48	15510B	FPC013AC001
HEP207	3	1	1		TYPE200-24	PMV3-L	PPR10	EM110/1.5/4	GP48	15510B	FPC013NC001, FPC013FC001
HEP207	3	1	2		TYPE200-24	PMV3-L	PPR10	EM240/1.5/4	GP48	15510B	FPC013NC001, FPC013FC001
HEP207	3	1	4		TYPE200-24	PMV3-L	PPR10	EM415/1.5/4	GP48	15510B	FPC013NC001, FPC013FC001
HEP207	3	2	1		TYPE200-24	PMV3-L	PPR25	EM110/1.5/4	GP48	15510B	FPC013AC001
HEP207	3	2	2		TYPE200-24	PMV3-L	PPR25	EM240/1.5/4	GP48	15510B	FPC013AC001
HEP207	3	2	4		TYPE200-24	PMV3-L	PPR25	EM415/1.5/4	GP48	15510B	FPC013AC001
HEP207	4	1	1		TYPE200-24	PMV4-L	PPR10	EM110/1.5/4	GP48	15510B	FPC013NC001, FPC013FC001
HEP207	4	1	2		TYPE200-24	PMV4-L	PPR10	EM240/1.5/4	GP48	15510B	FPC013NC001, FPC013FC001
HEP207	4	1	4		TYPE200-24	PMV4-L	PPR10	EM415/1.5/4	GP48	15510B	FPC013NC001, FPC013FC001
HEP207	4	2	1		TYPE200-24	PMV4-L	PPR25	EM110/1.5/4	GP48	15510B	FPC013AC001
HEP207	4	2	2		TYPE200-24	PMV4-L	PPR25	EM240/1.5/4	GP48	15510B	FPC013AC001
HEP207	4	2	4		TYPE200-24	PMV4-L	PPR25	EM415/1.5/4	GP48	15510B	FPC013AC001
HEP207	3	1	1	S	TYPE200-24	PMV3-S	PPR10	EM110/1.5/4T	GP48	15510B	FPC013NC001, FPC013FC001
HEP207	3	1	2	S	TYPE200-24	PMV3-S	PPR10	EM240/1.5/4T	GP48	15510B	FPC013NC001, FPC013FC001
HEP207	3	1	4	S	TYPE200-24	PMV3-S	PPR10	EM415/1.5/4T	GP48	15510B	FPC013NC001, FPC013FC001
HEP207	3	2	1	S	TYPE200-24	PMV3-S	PPR25	EM110/1.5/4T	GP48	15510B	FPC013AC001
HEP207	3	2	2	S	TYPE200-24	PMV3-S	PPR25	EM240/1.5/4T	GP48	15510B	FPC013AC001
HEP207	3	2	4	S	TYPE200-24	PMV3-S	PPR25	EM415/1.5/4T	GP48	15510B	FPC013AC001
HEP207	4	1	1	S	TYPE200-24	PMV4-S	PPR10	EM110/1.5/4T	GP48	15510B	FPC013NC001, FPC013FC001
HEP207	4	1	2	S	TYPE200-24	PMV4-S	PPR10	EM240/1.5/4T	GP48	15510B	FPC013NC001, FPC013FC001
HEP207	4	1	4	S	TYPE200-24	PMV4-S	PPR10	EM415/1.5/4T	GP48	15510B	FPC013NC001, FPC013FC001
HEP207	4	2	1	S	TYPE200-24	PMV4-S	PPR25	EM110/1.5/4T	GP48	15510B	FPC013AC001
HEP207	4	2	2	S	TYPE200-24	PMV4-S	PPR25	EM240/1.5/4T	GP48	15510B	FPC013AC001
HEP207	4	2	4	S	TYPE200-24	PMV4-S	PPR25	EM415/1.5/4T	GP48	15510B	FPC013AC001

IMPORTANT

WHEN ORDERING SPARES YOU MUST STATE THE FULL PART NUMBER AND THE PRODUCT SERIAL NUMBER - FROM THE LABEL
TO PROTECT YOUR WARRANTY ALWAYS USE GENUINE HI-FORCE PARTS.

Hi-Force HYDRAULIC TOOLS	TWO STAGE PUMP 200-24 SERIES.	SERIAL NUMBERS UP TO BS8411	SPARE PARTS LIST NO. TYPE 200-24P1

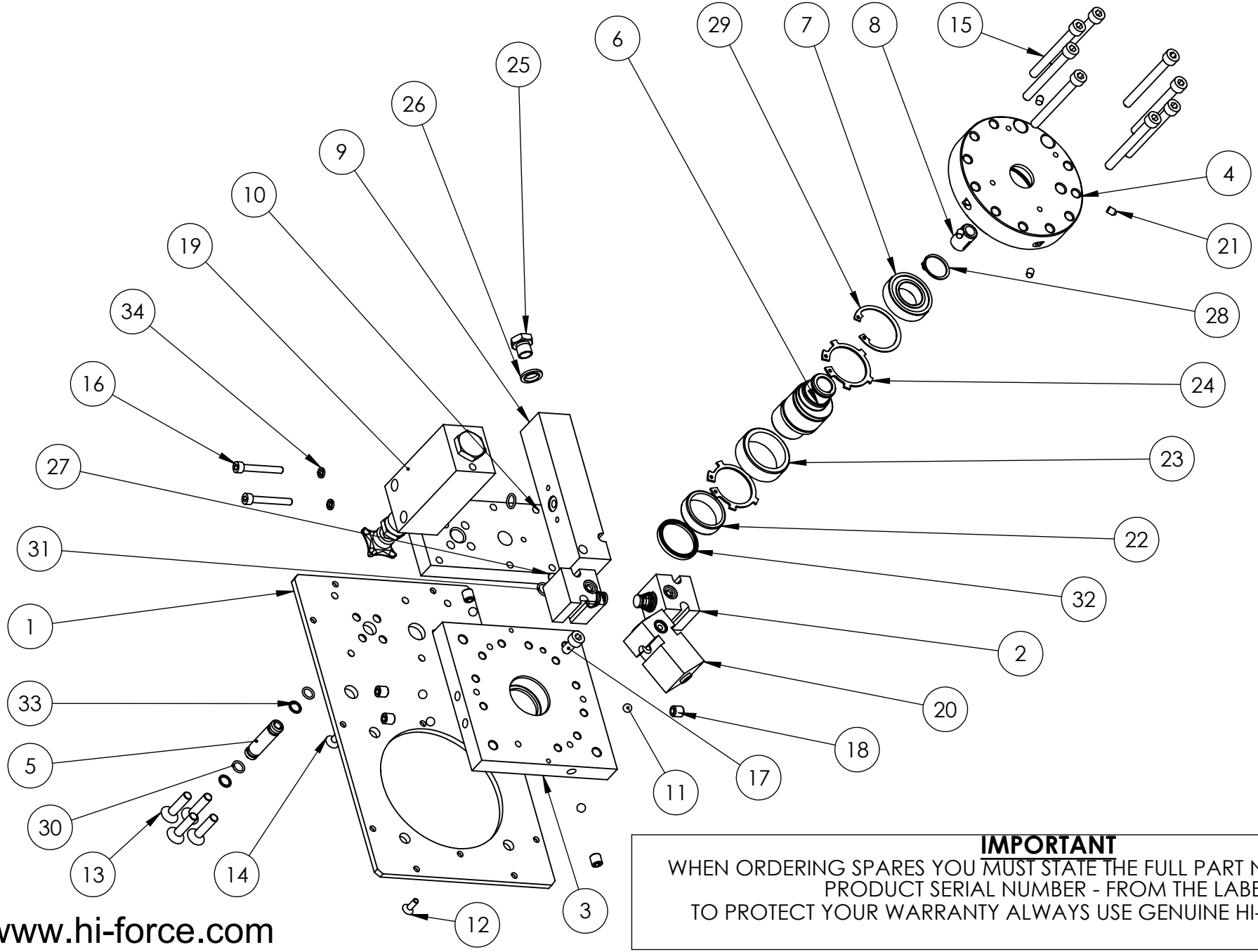

IMPORTANT

WHEN ORDERING SPARES YOU MUST STATE THE FULL PART NUMBER AND THE PRODUCT SERIAL NUMBER - FROM THE LABEL

TO PROTECT YOUR WARRANTY ALWAYS USE GENUINE HI-FORCE PARTS.

www.hi-force.com

Hi-Force HYDRAULIC TOOLS

TWO STAGE PUMP 200-24 SERIES.

SERIAL NUMBERS
UP TO BS8411

SPARE PARTS LIST NO.
TYPE 200-24P1

ITEM NO.	PART NUMBER	DESCRIPTION	QTY.
1	TAC000BA003	COVER PLATE	1
2	15494A	PISTON BLOCK ASSY.	2
3	15497	UPPER PLATE	1
4	15499	LOWER PLATE	1
5	E15503	CONNECTOR PIPE	1
6	15505	24MM DRIVE SHAFT	1
7	BSC025MC001	LOWER PLATE BEARING	1
8	15507	ADAPTOR	1
9	17587	TRANSFER BLOCK	1
10	17588	VALVE PLATE	1
11	BAC008SN000	8mm BALL	5
12	BLC005HF016	SKT CSK SCREW	2
13	BLC008KF035	SKT CSK SCREW	4
14	BLC006JE016	SKT CSK SCREW	1
15	BLC008KC080	CAP HD SCREW	8
16	BLC006JC045	CAP HD SCREW	2
17	BLC008KD016	CAP HD SCREW	1
18	FAS010MA010	M10 X 10 CUP POINT GRUB SCREW	5
19	HPRV1	HIGH PRESSURE R/VALVE	1
20	LPRV1	LOW PRESSURE R/VALVE	1
21	BPC006RS001	SEALING PLUG	4
22	BSC035NC001	UPPER PLATE BEARING	1
23	BSC040ND001	ECCENTRIC BEARING	1
24	STC040AA001	CIRCLIP TYPE 200/300	2
25	FAS006GJ010	1/4 INCH BLANKING PLUG	1
26	X	DOWTY WASHER	1
27	FFC012MA001	SUCTION FILTER	1
28	STC025AA001	CIRCLIP	1
29	STC047BA001	CIRCLIP	1
30	X	O - RING	2
31	X	O - RING	2
32	X	UPPER PLATE OIL SEAL	1
33	X	BACK UP RING	2
34	WAC006BC001	SPRING WASHER	2

PARTS MARKED 'X' SUPPLIED IN KIT HEP207TP1-K ONLY.

SHEET 2 OF 2.

IMPORTANT

WHEN ORDERING SPARES YOU MUST STATE THE FULL PART NUMBER AND THE PRODUCT SERIAL NUMBER - FROM THE LABEL
TO PROTECT YOUR WARRANTY ALWAYS USE GENUINE HI-FORCE PARTS.