Hi-Force HYDRAULIC TOOLS	HTW330R MANUAL TORQUE WRENCHES.	SERIAL NUMBERS ALL.	SPARE PARTS LIST NO. HTW330RP1

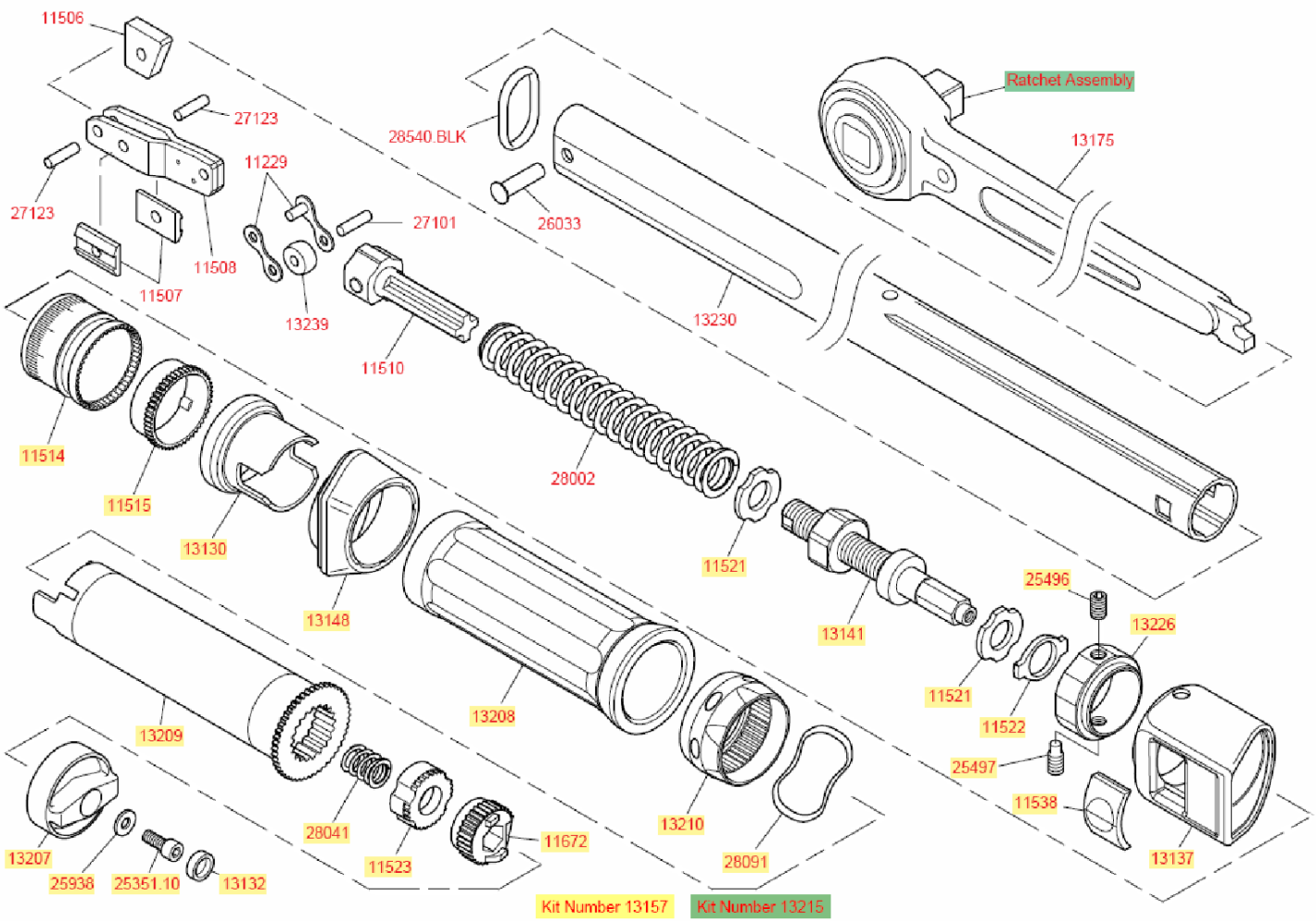

PART No	QUANTITY	DESCRIPTION
13239	1	ROLLER
11229	1	CHAIN LINK WITH PINS + LINK
11506	1	PIVOT BLOCK
11507	2	FRICTION PAD
11508	1	SECONDARY LEVER ASSEMBLED
11510	1	TRANSVERSE LINK
11514	1	SCALE ROTATING GEAR
11515	1	STATIONARY GEAR
11521	2	SHAPED WASHER
11522	1	END STOP
11523	1	LOCKING COLLAR GEAR 30 TEETH
11538	1	CLEAR LENS
11672	1	DRIVE SLEEVE GEAR 30 TEETH
13130	1	SCALE ROTATING CAM
13132	1	END BUNG - PLASTIC
13137	1	SCALE MECHANISM COVER
13141	1	ADJUSTING SCREW
13148	1	STATIONARY HANDLE ASSEMBLY
13175	1	RATCHET ASSEMBLY MODEL 300
13207	1	LOCKING KNOB
13208	1	ROTATING HANDLE ASSEMBLY
13209	1	SCALE ADJUSTING SHAFT
13210	1	HANDLE END PIECE
13226	1	THRUST WASHER
13230	1	BODY TUBE MODEL 300 - 2 SHOT HANDLE
25351.10	1	SCREW M4 x 10mm G12.9
25496	1	GRUB SCREW SOCKET M5 x 8LG OVAL
25497	1	GRUB SCREW SOCKET M5 x 6LG DOG POINT
25938	1	WASHER M4 STANDARD FLAT
26033	1	PIN PIVOT
27101	1	NEEDLE ROLLER 3.5mm DIA x 13.6mm
27123	2	NEEDLE ROLLER 4mm x 15.8mm LONG
28002	1	SPRING COMP 16.5mm DIA x 97mm x 2.64mm
28041	1	HANDLE LOCKING SPRING
28091	1	WAVE SPRING
28540.BLK	1	BLACK VITON 'O' RING BS 114

IMPORTANT

WHEN ORDERING SPARES YOU MUST STATE THE FULL PART NUMBER AND THE PRODUCT SERIAL NUMBER - FROM THE LABEL
TO PROTECT YOUR WARRANTY ALWAYS USE GENUINE HI-FORCE PARTS.

www.hi-force.com