Hi-Force HYDRAULIC TOOLS

HTWP2142AR MINI TORQUE WRENCH PUMP.

SERIAL NUMBERS

FROM BP6216 TO EA1152

SPARE PARTS LIST NO.

ITEM NO.	PART NUMBER	DESCRIPTION	QTY.	AVAILABLE IN HTWP-SK1 SERVICE KIT	AVAILABLE TO ORDER AS SPARE PART
1	AAN000UP001	60 x 30 mm UNIVERSAL NAME PLATE	1		
2	BLC005HH010	BUTTON HEAD SCREW	2		
3	BLC005HH016	BUTTON HEAD SCREW	10		
4	BLC008KD040	SOCKET CAP HD SCREW	4		
5	BLC008KD016	SOCKET CAP HD SCREW	4		
6	BLC008KD020	SOCKET CAP HD SCREW	4		
7	BPC020SP001	FILLER	1		✓
8	BS200X43	200 x 43 mm HI-FORCE BRANDING STICKER	2		
9	DCSF00328	DOUBLE SIDED MAGNET	1		
10	EMA230MC001	230V MOTOR ASSEMBLY	1		✓
11	FAS002HZ001	NO.4 x 3/16 BRASS HAMMER DRIVE SCREW	2		
12	FPC010PN002	3/8" X 7/8" NPT SOCKET PLUG	2		
13	FPC013PC001	12" BSPT HEX SOCKET PLUG	1		
14	FPC020AM002	BARREL	1		
15	FPC020AM003	EXTENSION TUBE	1		✓
16	HOC002AP003	GAUGE FITTING	1		✓
17	NUC005WA001	M5 NUT	2		
18	NUC008KA000	FULL NUT	4		
19	NUC008KC000	M8 NYLOCK NUT	4		
20	NUC020LB000	LOCK NUT	2		
21	PG2G	PRESSURE GAUGE	1		✓
22	BLC008ST000	M8X35MM ENGINEERING STUD	4		
23	CF4F	COUPLER	1		
24	CM4F	COUPLER	1		
25	FFC045MZ001	FILTER	1		
26	FPC002PN001	1/16" x 7/8" NPT SOCKET PLUG	7		
27	FPC006DB001	FITTING	2		
28	FPC006QB003	ADAPTOR	1		
29	FPC006YN001	MALE CONNECTOR 1/4" NPT x 10mm	2		
30	FPC010TB001	TEE	1		

ITEM NO.	PART NUMBER	DESCRIPTION	QTY.	AVAILABLE IN HTWP-SK1 SERVICE KIT	AVAILABLE TO ORDER AS SPARE PART
31	FPC010YN001	MALE STUD COUPLER	1		
32	FPC013BA001	REDUCER	1		
33	HF27	M/M ADAPTOR	2		
34	HOC006PS019	PRE BENT TUBE	1		
35	HOC006PS020	TUBE	2		
36	HOC006PS021	PRE BENT TUBE	1		
37	PMC014CF002	PUMP HEART	1		✓
38	SEC001KT004	GASKET	1	✓	
39	SEC002KT014	PUMP GASKET	1	✓	
40	TAC000PP001	RETURN PIPE	2		
41	TAC005BR004	TANK LID	1		
42	VFC000CD005	2/2 VALVE	1		✓
43	VFC000CD008	4/2 VALVE ASSY	1		✓
44	VFC010RD011	SUB PLATE	1		
45	VRA700AF002	RELIEF VALVE	1		✓
46	VRC700ZE001	ADJ PRESSURE REL VALVE	1		✓
47	WAC007HD000	1/4" BSP SELF CENTERING BONDED WASHER	1	✓	
48	WAC008KD000	DOWTY WASHER	8	✓	
49	SEC003KT009	TANK GASKET	1	✓	
50	SFC030HA001	FILLER BRACKET	1		
51	TAC000FT006	LEVEL TEMP GAUGE	1		✓
52	TAC005AR002	TANK	1		✓
53	TAC005CS001	WELDED ROLL FRAME	1		✓
54	WAC005AB001	WASHER M5	2		
55	WAC005EC001	M5 COPPER WASHER	10	✓	
56	WAC008AB000	M8 PLAIN WASHER	12		
57	WAC008BB000	M8 SPRING WASHER	4		
58	WAC008RH001	M8 SADDLE WASHER FOR 16MM TUBE	4		
59	SS60X60	SAFETY STICKER 100 X 100 mm	1		
60	BPC020SP002	FILLER PLUG	1		

REVISION	
1	5227
2	5601
3	
4	
5	
6	
7	
8	
9	
10	
11	
12	
13	
14	
15	
16	
17	
18	
19	
20	

NOTE:
EMA230MC001 BOM REFER TO SHEET 3
HTWP-SK1 BOM REFER TO SHEET 4

IMPORTANT

WHEN ORDERING SPARES YOU MUST STATE THE FULL PART NUMBER AND THE PRODUCT SERIAL NUMBER - FROM THE LABEL
TO PROTECT YOUR WARRANTY ALWAYS USE GENUINE HI-FORCE PARTS.

www.hi-force.com

Hi-Force HYDRAULIC TOOLS	HTWP2142AR MINI TORQUE WRENCH PUMP.	SERIAL NUMBERS FROM BP6216 TO EA1152	SPARE PARTS LIST NO. SHT 2 OF 4 SHTS

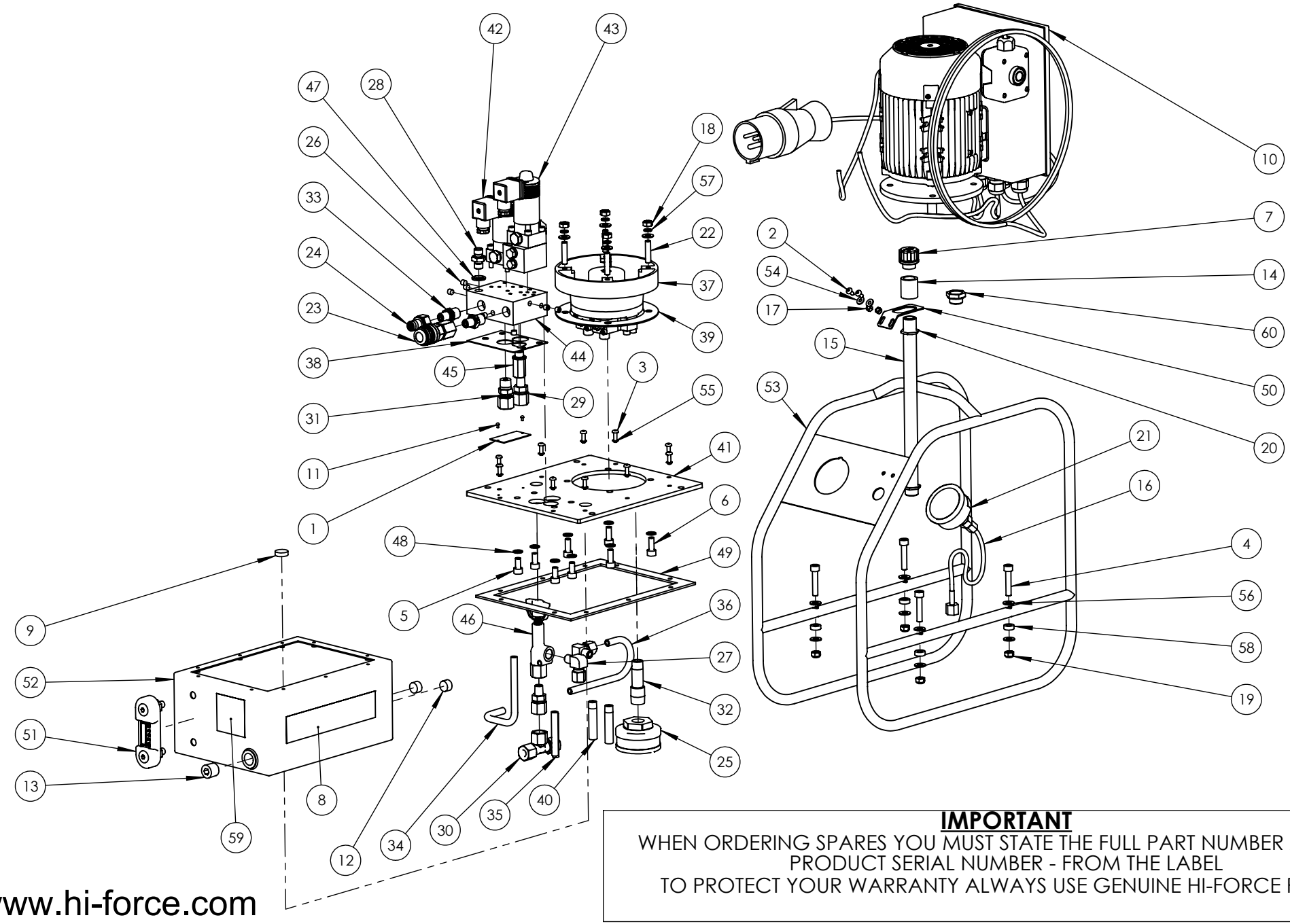

REVISION	
1	5227
2	5601
3	
4	
5	
6	
7	
8	
9	
10	
11	
12	
13	
14	
15	
16	
17	
18	
19	
20	

IMPORTANT

WHEN ORDERING SPARES YOU MUST STATE THE FULL PART NUMBER AND THE PRODUCT SERIAL NUMBER - FROM THE LABEL
TO PROTECT YOUR WARRANTY ALWAYS USE GENUINE HI-FORCE PARTS.

www.hi-force.com

Hi-Force HYDRAULIC TOOLS

HTWP2142AR MINI TORQUE WRENCH PUMP.

SERIAL NUMBERS

FROM BP6216 TO EA1152

SPARE PARTS LIST NO.

REVISION	
1	5227
2	5601
3	
4	
5	
6	
7	
8	
9	
10	
11	
12	
13	
14	
15	
16	
17	
18	
19	
20	

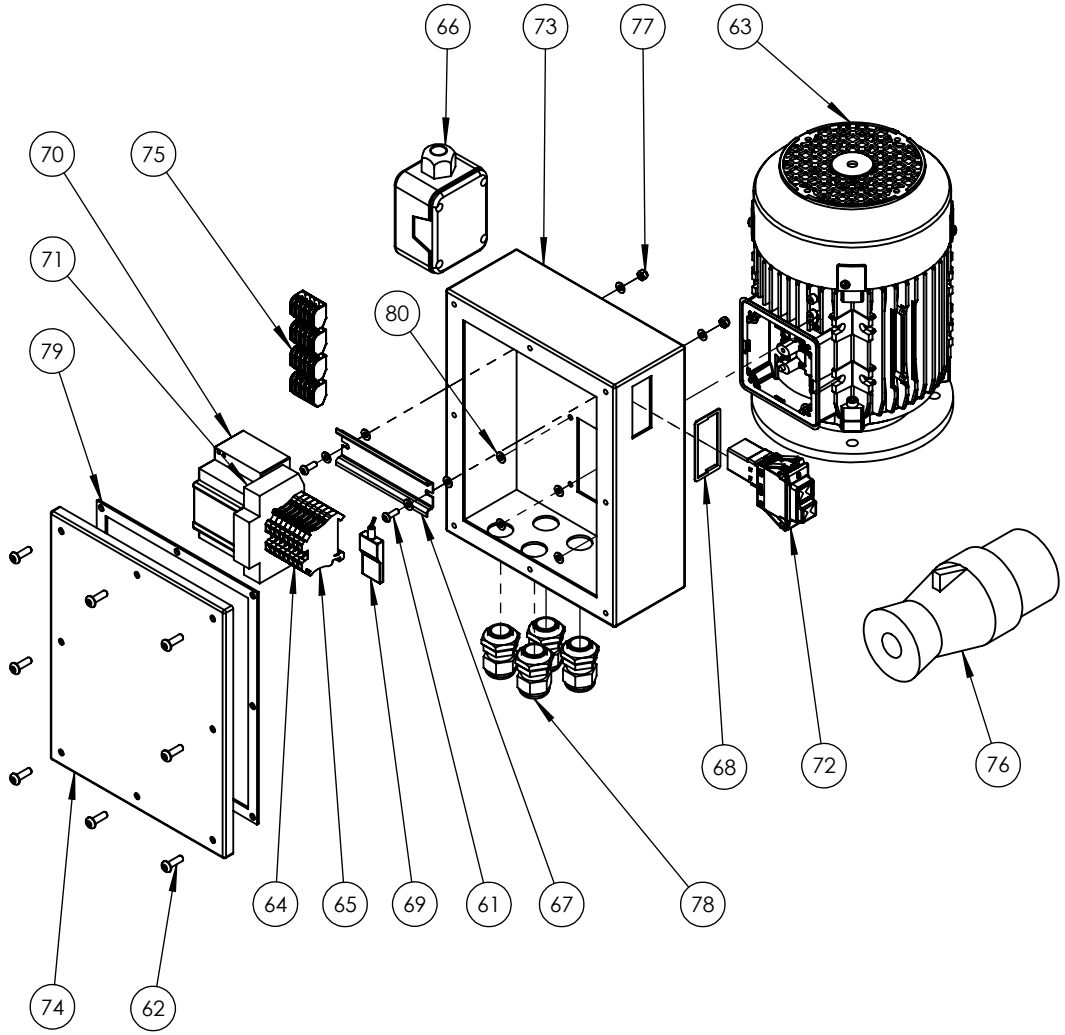

ITEM NO.	PART NUMBER	DESCRIPTION	QTY.	AVAILABLE IN HTWP-SK1 SERVICE KIT	AVAILABLE TO ORDER AS SPARE PART
61	BLC004-H012	BUTTON HEAD SCREW	2		
62	BLC005HH016	BUTTON HEAD SCREW	8		
63	EM230-0.75-4LAF	MOTOR WITH BOX REMOVED	1		
64	EMC000NZ001	TERMINAL BLOCK	7		
65	EMC000NZ002	EARTH TERMINAL BLOCK	1		
66	EMC000VZ003	PENDANT	1		✓
67	EMC000XZ001	DIN RAIL	1		
68	EMC000XZ002	CIRCUIT BREAKER SPACER	1		
69	EMC024CA001	DELAY TIMER	1		✓
70	EMC024TB001	POWER SUPPLY 24 V DC	1		✓
71	EMC240DZ001	HOUR TIMER	1		
72	EMC240UC001	CIRCUIT BREAKER 240V 4A	1		✓
73	EMC240EZ001	ENCLOSURE BOX	1		
74	EMC240EZ002	ENCLOSURE LID	1		
75	EMC400NG001	Wago 5-way lever connector 222 series	4		
76	MCC240EP002	240V PLUG	1		
77	NUC004VC000	NUT	2		
78	NUC020LS002	GLAND 6-12MM	4		
79	SEC002KT015	ENCLOSURE GASKET	1	✓	
80	WAC004FS000	NYLON WASHER	10		

IMPORTANT

WHEN ORDERING SPARES YOU MUST STATE THE FULL PART NUMBER AND THE PRODUCT SERIAL NUMBER - FROM THE LABEL

TO PROTECT YOUR WARRANTY ALWAYS USE GENUINE HI-FORCE PARTS.

www.hi-force.com

REVISION	
1	5227
2	5601
3	
4	
5	
6	
7	
8	
9	
10	
11	
12	
13	
14	
15	
16	
17	
18	
19	
20	

HTWP-SK1 SERVICE KIT

ITEM NO.	PART NUMBER	DESCRIPTION	QTY.
1	SEC002KT015	ENCLOSURE GASKET	1
2	SEC001KT004	GASKET	1
3	SEC002KT014	PUMP GASKET	1
4	WAC007HD000	1/4" BSP SELF CENTERING BONDED WASHER	1
5	WAC008KD000	DOWTY WASHER	8
6	SEC003KT009	TANK GASKET	1
7	WAC005EC001	M5 COPPER WASHER	10

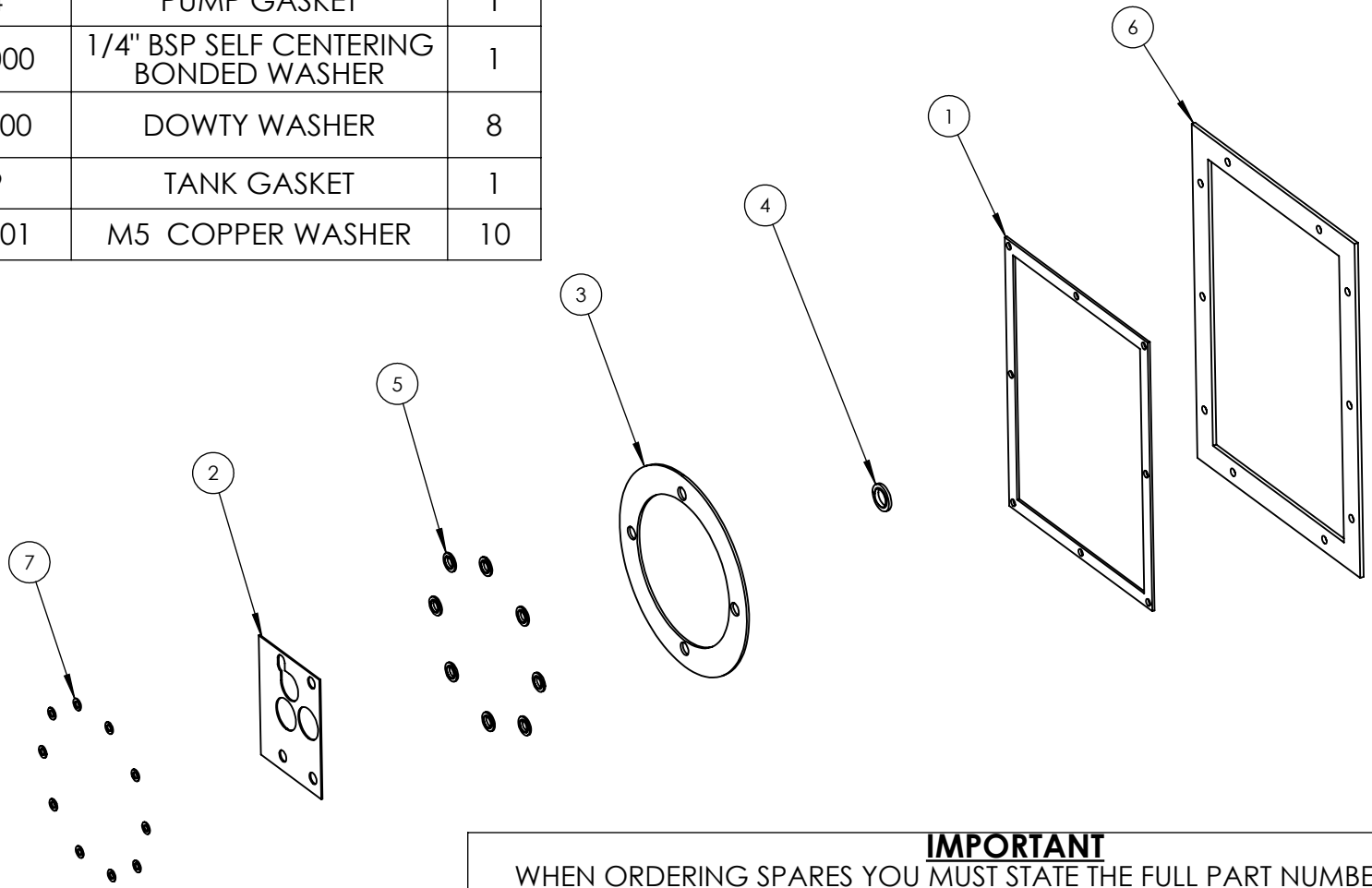

IMPORTANT

WHEN ORDERING SPARES YOU MUST STATE THE FULL PART NUMBER AND THE PRODUCT SERIAL NUMBER - FROM THE LABEL

TO PROTECT YOUR WARRANTY ALWAYS USE GENUINE HI-FORCE PARTS.

Hi-Force HYDRAULIC TOOLS	HTWP2142AR MINI TORQUE WRENCH PUMP.	SERIAL NUMBERS FROM BL3450	SPARE PARTS LIST NO. HTWP2142AR Iss 2 SHT 1 OF 3 SHTS

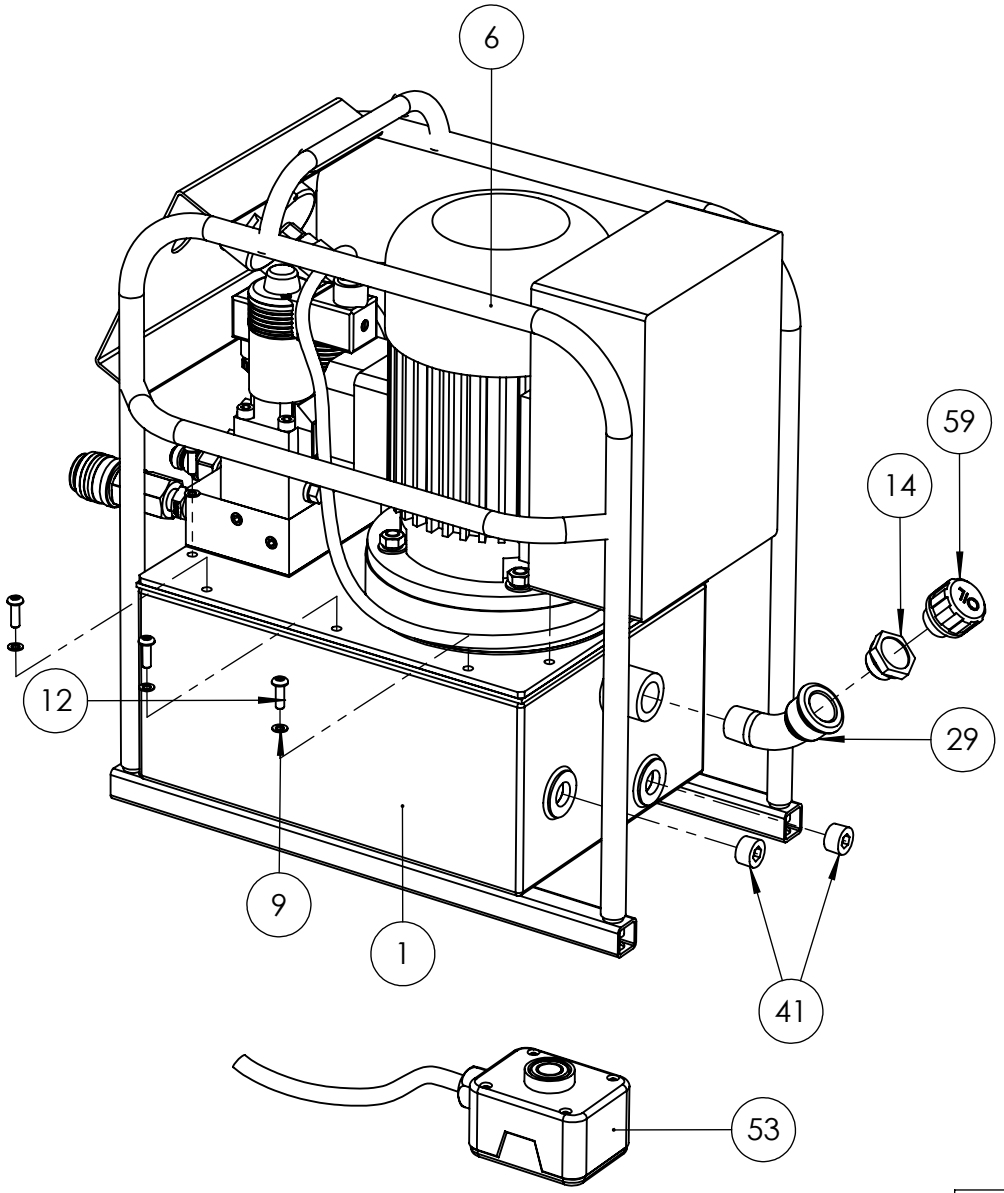

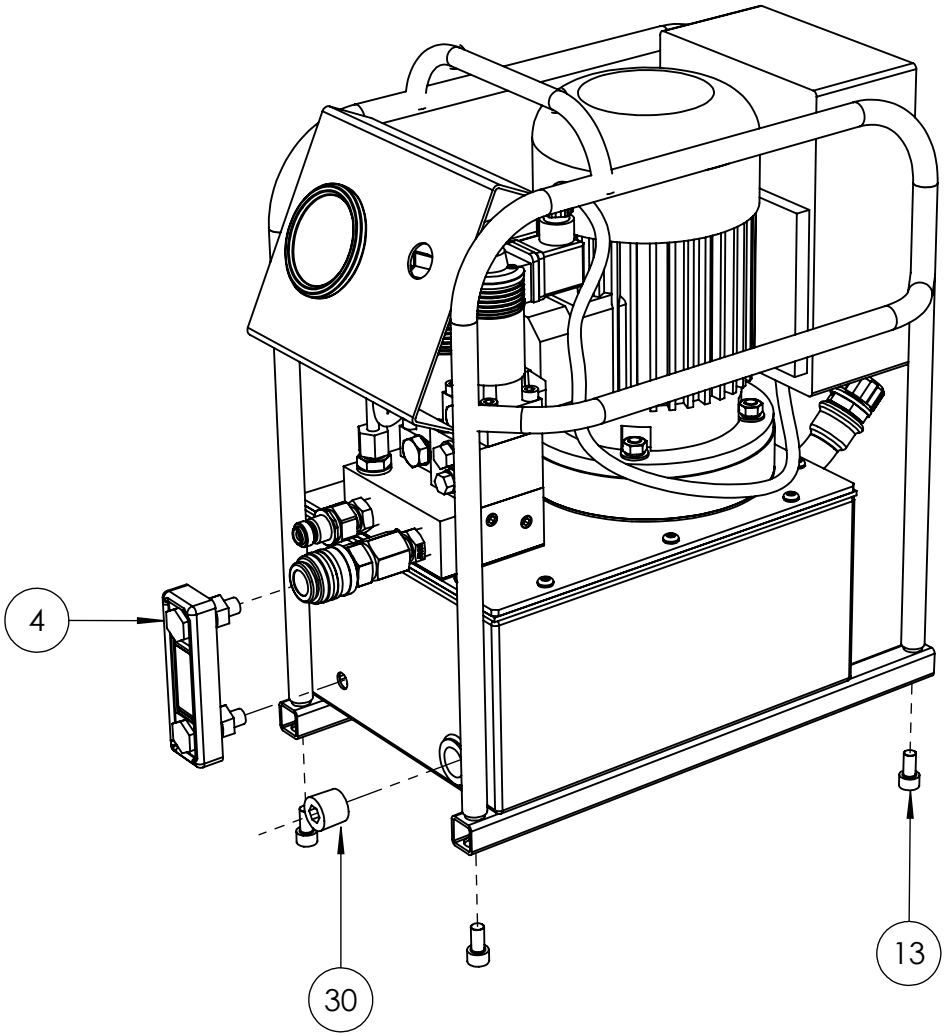

REVISION	
1	5227
2	
3	
4	
5	
6	
7	
8	
9	
10	
11	
12	
13	
14	
15	
16	
17	
18	
19	
20	

IMPORTANT

WHEN ORDERING SPARES YOU MUST STATE THE FULL PART NUMBER AND THE PRODUCT SERIAL NUMBER - FROM THE LABEL

TO PROTECT YOUR WARRANTY ALWAYS USE GENUINE HI-FORCE PARTS.

www.hi-force.com

Hi-Force HYDRAULIC TOOLS	HTWP2142AR MINI TORQUE WRENCH PUMP	SERIAL NUMBERS FROM BL3450	SPARE PARTS LIST NO. HTWP2142AR Iss 2 SHT 2 OF 3 SHTS

REVISION	
1	5227
2	
3	
4	
5	
6	
7	
8	
9	
10	
11	
12	
13	
14	
15	
16	
17	
18	
19	
20	

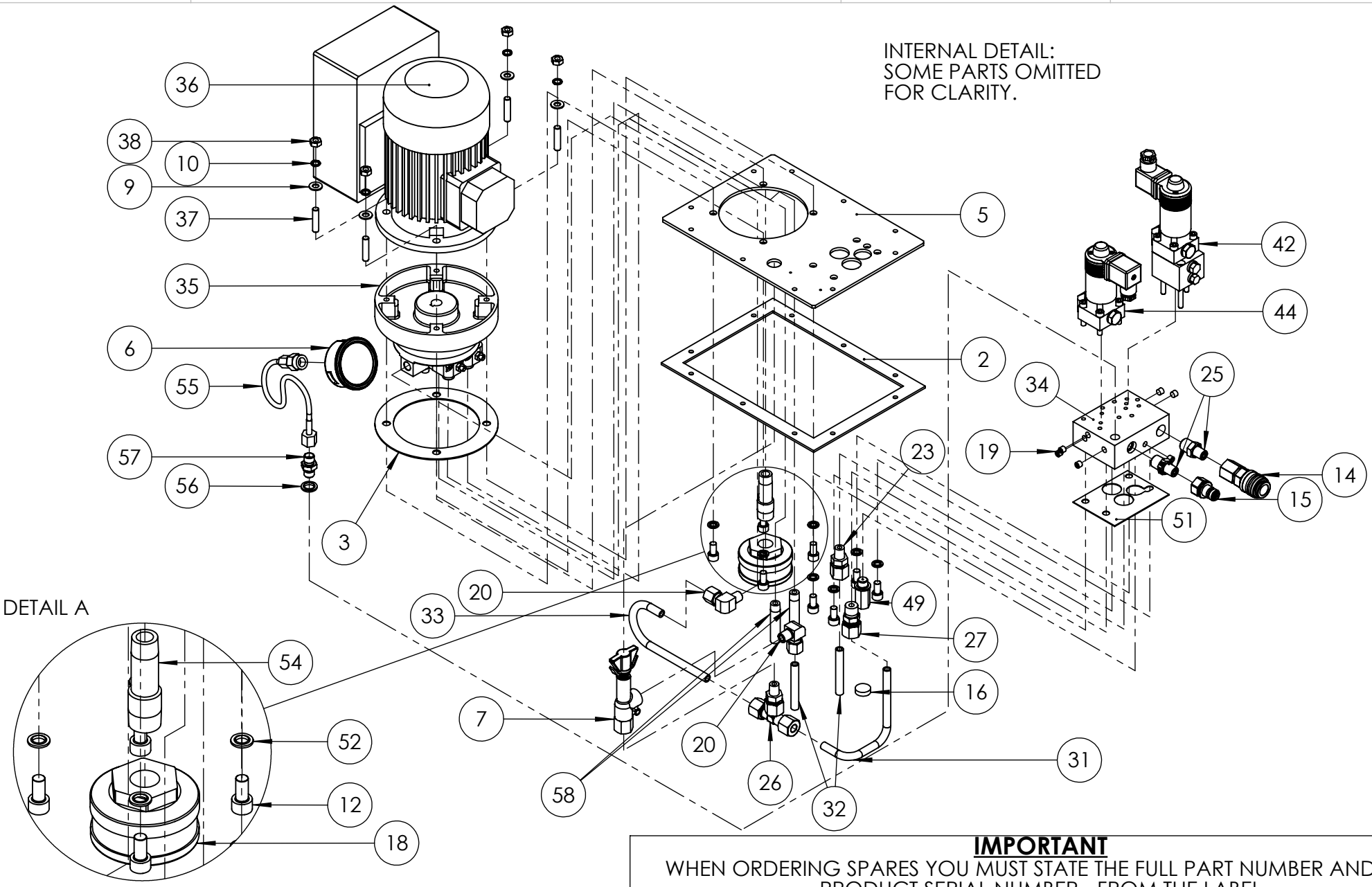

IMPORTANT

WHEN ORDERING SPARES YOU MUST STATE THE FULL PART NUMBER AND THE PRODUCT SERIAL NUMBER - FROM THE LABEL

TO PROTECT YOUR WARRANTY ALWAYS USE GENUINE HI-FORCE PARTS.

www.hi-force.com

Hi-Force HYDRAULIC TOOLS

HTWP2142AR MINI TORQUE WRENCH PUMP.

SERIAL NUMBERS
FROM BL3450

SPARE PARTS LIST NO.
HTWP2142AR Iss 2

ITEM NO.	PART NUMBER	DESCRIPTION	QTY.
1	TAC005AR001	TANK	1
2	SEC003KT004	TANK GASKET	1
3	SEC130KF001	MOTOR GASKET	1
4	TAC000FT006	LEVEL TEMP GAUGE	1
5	TAC005BR003	TANK LID	1
6	TAC005CA001	ROLL FRAME	1
7	PG2G	PRESSURE GAUGE	1
8	VRC700ZE001	ADJ PRESSURE REL VALVE	1
9	WAC005EC001	M5 COPPER WASHER	10
10	WAC008AB000	M8 WASHER	4
11	WAC008BB000	M8 SPRING WASHER	4
12	BLC005HH016	BUTTON HEAD SCREW	10
13	BLC008KD016	SOCKET CAP HD SCREW	8
14	BPC020SP002	FILLER PLUG	1
15	CF4F	COUPLER	1
16	CM4F	COUPLER	1
17	DCSF00328	MAGNET	1
18	FFC045MZ001	FILTER	1
19	FPC002PN001	PLUG	7
20	FPC006DB001	FITTING	2
23	FPC006YN001	STUD COUPLING	2
25	HF27	M/M ADAPTOR	2
26	FPC010TB001	TEE	1
27	FPC010YN001	MALE STUD COUPLER	1
29	FPC013HC001	ELBOW 45 DEGREES	1
30	FPC013PC001	PLUG	1
31	HOC006PS019	PRE BENT TUBE	1

ITEM NO.	PART NUMBER	DESCRIPTION	QTY.
32	HOC006PS020	TUBE	2
33	HOC006PS021	PRE BENT TUBE	1
34	VFC010RD011	SUB PLATE	1
35	PMC014CF002	PUMP UNIT	1
36	EM240/0.75/4TR	ELECTRIC MOTOR	1
37	BLC008ST000	M8X35mm ENGINEERING STUD	4
38	NUC008KA000	FULL NUT	4
41	FPC010PN002	3/8 X 7/8 IN. NPT SOCKET PLUG	2
42	VFC000CD008	4/2 VALVE ASM	1
44	VFC00CD005	2/2 VALVE	1
49	VRA700AF002	RELIEF VALVE	1
51	SEC001KT004	GASKET	1
52	WAC008KD000	DOWTY WASHER	8
53	EMC000VZ003	PENDANT	1
54	FPC013BA001	REDUCER	1
55	HOC002AP003	GAUGE FITTING	1
56	WAC007HD000	DOWTY WASHER	1
57	FPC006QB003	ADAPTOR	1
58	TAC000PP001	RETURN PIPE	2
59	BPC020SP001	BREATHER	1

REVISION	
1	5227
2	
3	
4	
5	
6	
7	
8	
9	
10	
11	
12	
13	
14	
15	
16	
17	
18	
19	
20	

IMPORTANT

WHEN ORDERING SPARES YOU MUST STATE THE FULL PART NUMBER AND THE PRODUCT SERIAL NUMBER - FROM THE LABEL
TO PROTECT YOUR WARRANTY ALWAYS USE GENUINE HI-FORCE PARTS.

www.hi-force.com

Hi-Force HYDRAULIC TOOLS	HTWP2142AR MINI TORQUE WRENCH PUMP.	SERIAL NUMBERS UPTO BL3449	SPARE PARTS LIST NO. HTWP2142ARP1

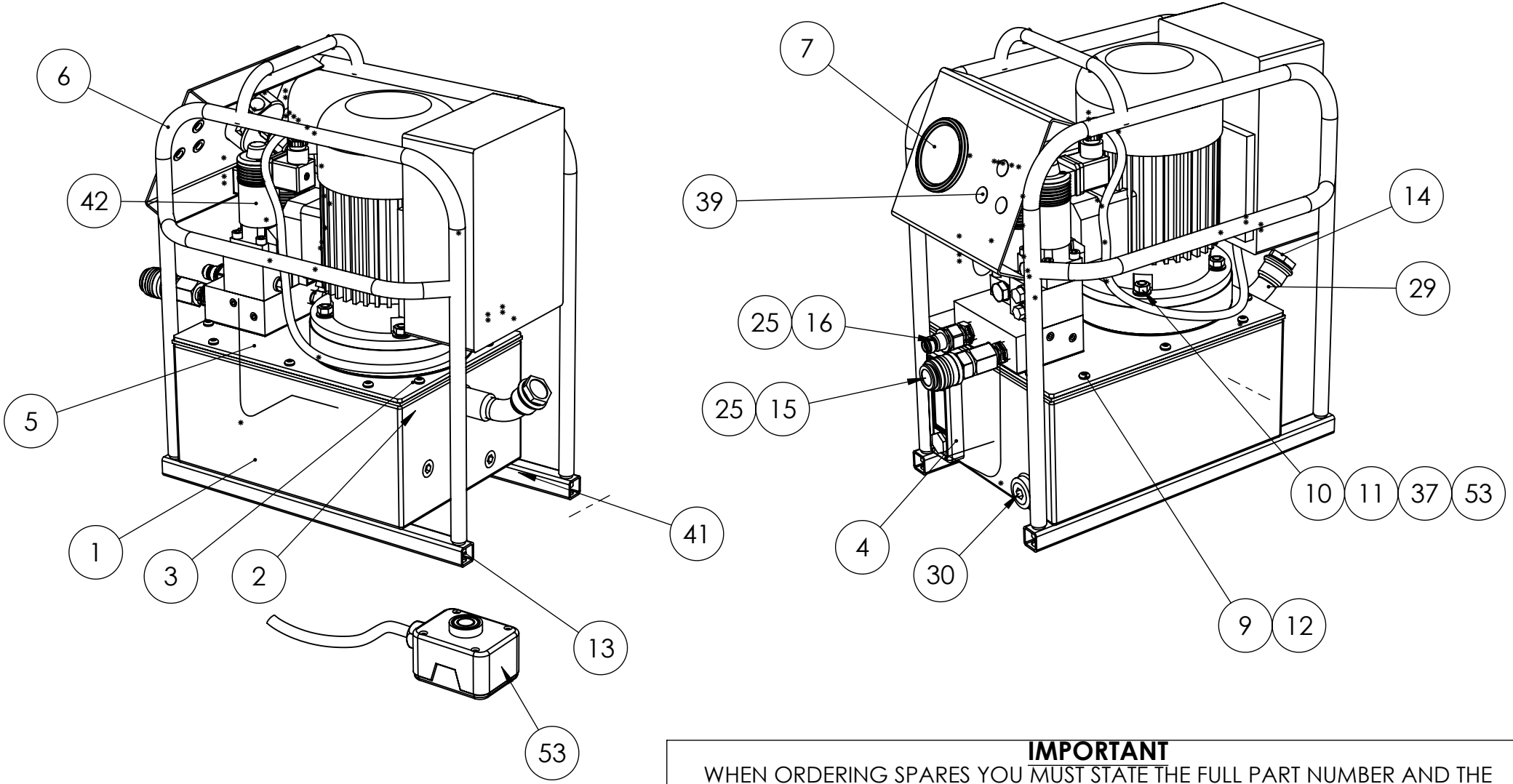

IMPORTANT

WHEN ORDERING SPARES YOU MUST STATE THE FULL PART NUMBER AND THE PRODUCT SERIAL NUMBER - FROM THE LABEL

TO PROTECT YOUR WARRANTY ALWAYS USE GENUINE HI-FORCE PARTS.

www.hi-force.com

Hi-Force HYDRAULIC TOOLS	HTWP2142AR MINI TORQUE WRENCH PUMP.	SERIAL NUMBERS UPTO BL3449	SPARE PARTS LIST NO. HTWP2142ARP1

INTERNAL DETAIL:
SOME PARTS OMITTED
FOR CLARITY.

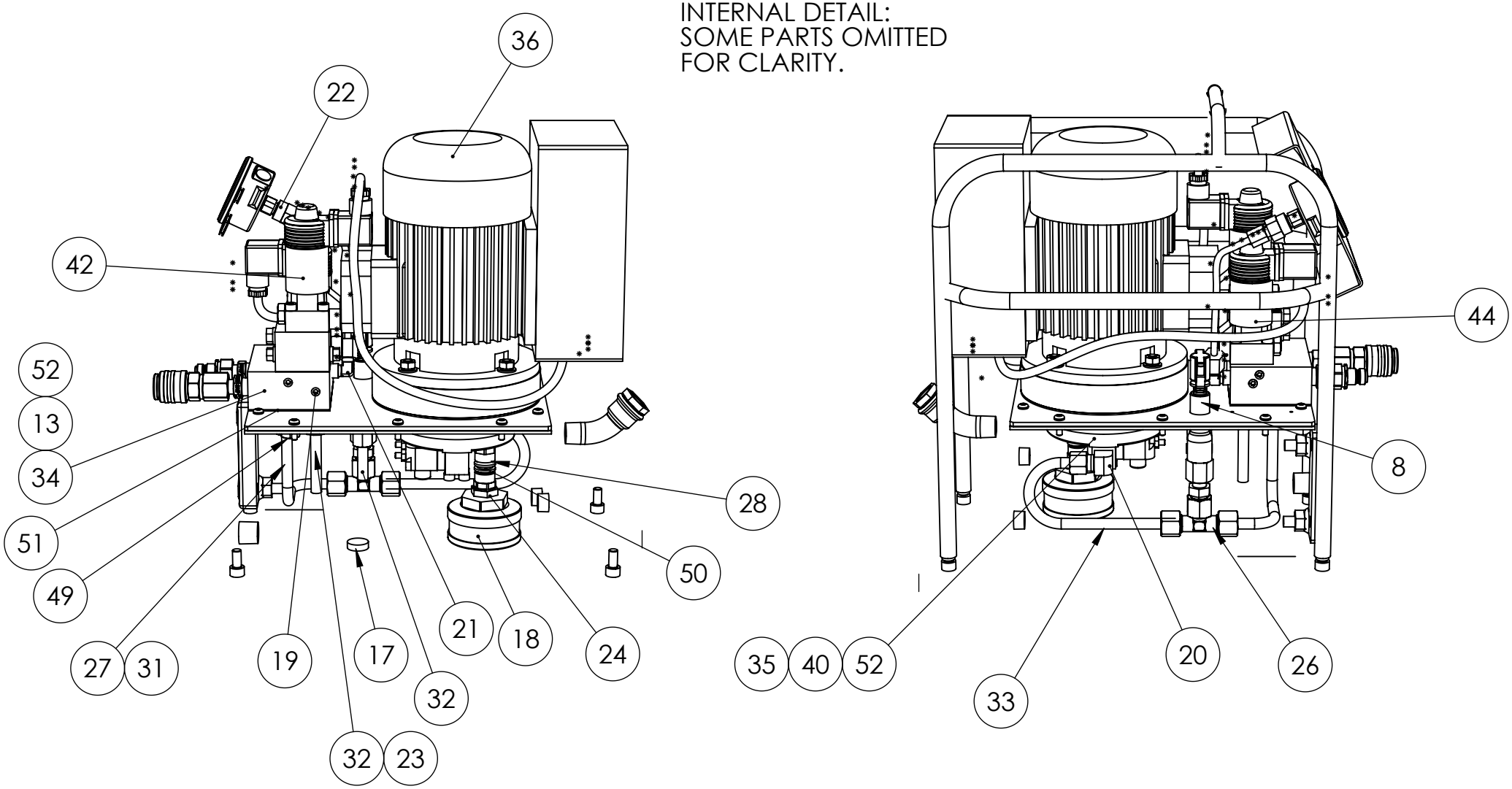

IMPORTANT

WHEN ORDERING SPARES YOU MUST STATE THE FULL PART NUMBER AND THE PRODUCT SERIAL NUMBER - FROM THE LABEL

TO PROTECT YOUR WARRANTY ALWAYS USE GENUINE HI-FORCE PARTS.

www.hi-force.com

Hi-Force HYDRAULIC TOOLS	HTWP2142AR MINI TORQUE WRENCH PUMP.	SERIAL NUMBERS UPTO BL3449	SPARE PARTS LIST NO. HTWP2142ARP1

ITEM NO.	PART NUMBER	DESCRIPTION	QTY.
1	TAC005AR001	TANK.	1
2	X	TANK GASKET	1
3	X	MOTOR GASKET	1
4	TAC000FT006	LEVEL TEMP GAUGE	1
5	TAC005BR003	5 LITRE TANK LID	1
6	TAC005CA001	ROLL FRAME	1
7	PG2G	PRESSURE GAUGE	1
8	VRC700ZE001	ADJ PRESSURE REL VALVE	1
9	WAC005EC001	M5 COPPER WASHER	10
10	WAC008AB000	M8 WASHER	4
11	WAC008BB000	M8 SPRING WASHER	4
12	BLC005HH016	BUTTON HEAD SCREW	10
13	BLC008KD016	SOCKET CAP HD SCREW	8
14	BPC020SP002	FILLER PLUG	1
15	CF4F	COUPLER	1
16	CM4F	COUPLER	1
17	DCSF00328	MAGNET	1
18	FFC045MZ001	FILTER	1
19	FPC002PN001	PLUG	5
20	FPC006DB001	FITTING	2
21	FPC006DN001	COMPRESSION ELBOW	1
22	FPC006WB001	1/4BSP X 6MM FEM STUD COUPLER	1
23	FPC006YN001	STUD COUPLING	2
24	FPC010BB005	REDUCER	1
25	HF27	M/M ADAPTOR	2

ITEM NO.	PART NUMBER	DESCRIPTION	QTY.
26	FPC010TB001	TEE	1
27	FPC010YN001	MALE STUD COUPLER	1
28	FPC012WS001	STUD 3/8 BSP TO 12MM PUSH	2
29	FPC013HC001	ELBOW 45 DEGREES.	1
30	FPC013PC001	PLUG	1
31	HOC006PS019	PRE BENT TUBE	1
32	HOC006PS020	TUBE	2
33	HOC006PS021	PRE BENT TUBE	1
34	VFC010RD007	SUB PLATE	1
35	PMC014CF001	PUMP UNIT	1
36	SEE NOTE	ELECTRIC MOTOR	1
37	BLC008ST000	M8X35MM ENGINEERING STUD	4
53	NUC008KA000	FULL NUT	4
39	BPC010SP005	BLIND GROMMET	3
40	BLC008KD030	SOCKET CAP HD SCREW	4
41	FPC010PN002	3/8 X 7/8 IN. NPT SOCKET PLUG	2
42	VFC000CD008	4/2 VALVE ASSY	1
44	VFC000CD005	2/2 VALVE	1
49	VRA700AF002	RELIEF VALVE	1
50	HOC015PC003	TUBE	1
51	x	GASKET	1
52	x	DOWTY WASHER	8
53	EMC000VZ003	PENDANT	1

NOTES:
ANY ITEMS MARKED 'X' AND SEAL KIT FOR
PUMP HEART SUPPLIED IN KIT HTWP2141/2-K ONLY.

ELECTRIC MOTOR:
EM230/1.1/2TR UP TO SERIAL NUMBER AZ2218
EM240/0.55/4TR FROM SERIAL NUMBER AZ2219

IMPORTANT
WHEN ORDERING SPARES YOU MUST STATE THE FULL PART NUMBER AND THE PRODUCT SERIAL NUMBER - FROM THE LABEL
TO PROTECT YOUR WARRANTY ALWAYS USE GENUINE HI-FORCE PARTS.

www.hi-force.com