Hi-Force HYDRAULIC TOOLS	100, 150 & 200 TONNE TOUGHLIFT - AIR DRIVEN	SERIAL NUMBERS ALL	SPARE PARTS LIST NO. TL100A-TL200AP1

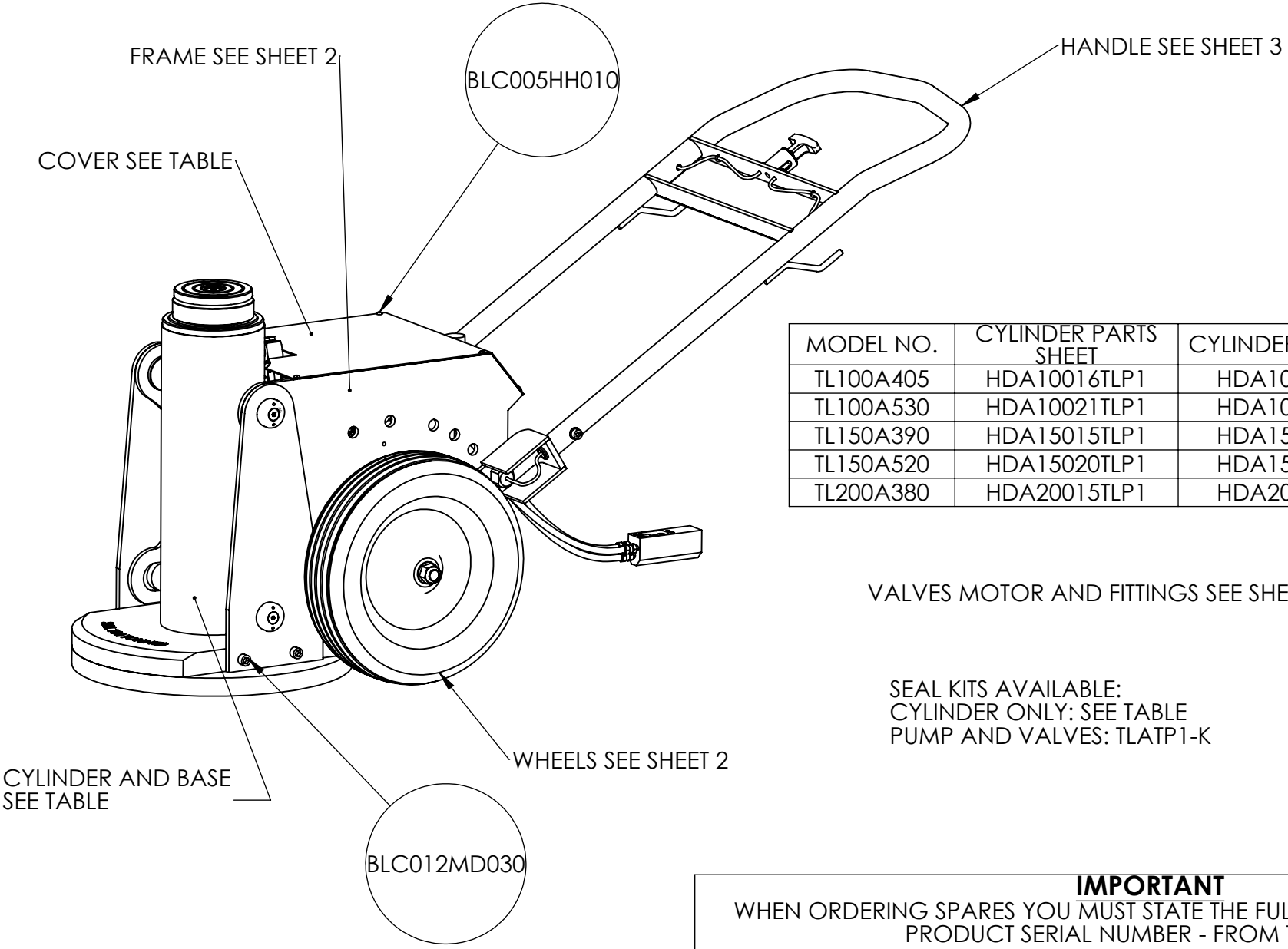

MODEL NO.	CYLINDER PARTS SHEET	CYLINDER SEAL KIT	COVER
TL100A405	HDA10016TLP1	HDA100TP1-K	SFC348HE004
TL100A530	HDA10021TLP1	HDA100TP1-K	SFS348HE009
TL150A390	HDA15015TLP1	HDA150TP1-K	SFC348HE003
TL150A520	HDA15020TLP1	HDA150TP1-K	SFS348HE001
TL200A380	HDA20015TLP1	HDA200TP1-K	SFC348HE002

VALVES MOTOR AND FITTINGS SEE SHEET 4

SEAL KITS AVAILABLE:
CYLINDER ONLY: SEE TABLE
PUMP AND VALVES: TLATP1-K

IMPORTANT
WHEN ORDERING SPARES YOU MUST STATE THE FULL PART NUMBER AND THE PRODUCT SERIAL NUMBER - FROM THE LABEL
TO PROTECT YOUR WARRANTY ALWAYS USE GENUINE HI-FORCE PARTS.

www.hi-force.com

Hi-Force HYDRAULIC TOOLS	DOUBLE ACTING CYLINDER	SERIAL NUMBERS ALL	SPARE PARTS LIST NO. HDA15020TL SHEET 1 OF 2 SHEETS

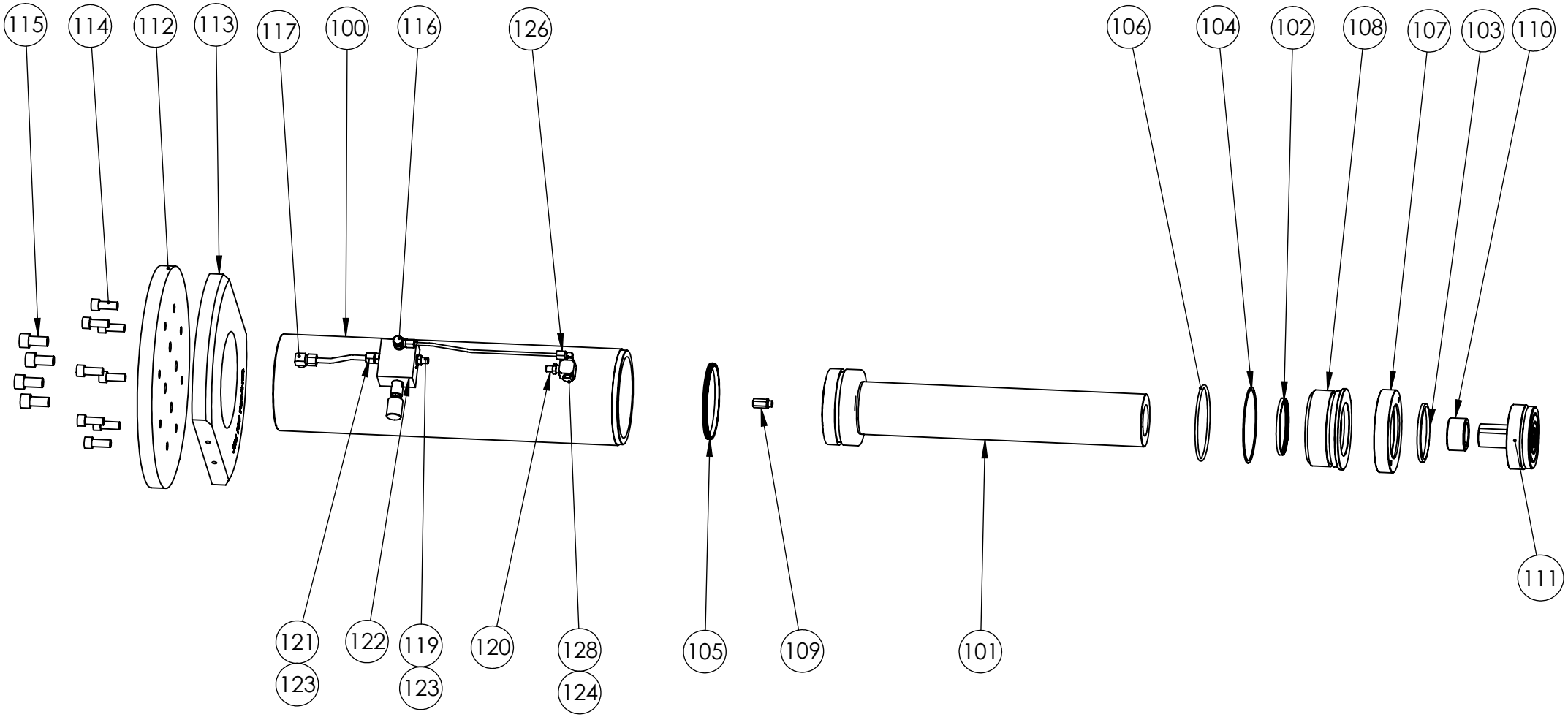

IMPORTANT

WHEN ORDERING SPARES YOU MUST STATE THE FULL PART NUMBER AND THE PRODUCT SERIAL NUMBER - FROM THE LABEL

TO PROTECT YOUR WARRANTY ALWAYS USE GENUINE HI-FORCE PARTS.

www.hi-force.com

Hi-Force HYDRAULIC TOOLS

DOUBLE ACTING CYLINDER

SERIAL NUMBERS
ALL

SPARE PARTS LIST NO.
HDA15020TL

ITEM NO.	PART NUMBER	DESCRIPTION	QTY.
100	CBC165AR002	CYLINDER	1
101	PRC165VR002	PISTON.	1
102	X	ROD SEAL	1
103	X	WIPER	1
104	X	BACK UP RING	1
105	X	PISTON SEAL	1
106	X	O - RING	1
107	SRC114WQ002	STOP RING	1
108	SSC165EA004	SEAL RETAINER.	1
109	VRA700AF002	RELIEF VALVE	1
110	ADC150PA001	ADAPTOR	1
111	TLS150	TILTING SADDLE	1
112	ADC200BC001	BASE PLATE	1
113	ADC150BC001	INTERMEDIATE PLATE	1
114	BLC016ND040	SOCKET CAP HD SCREW	8
115	BLC020PC040	SOCKET CAP HD SCREW	4
116	FPC006QB002	6MM BANJO	1
117	FPC010DN001	STUD ELBOW	1
118	FPC010FZ003	ELBOW FITTING	1
119	FPC010NB001	REDUCER	1
120	FPC010NB002	REDUCER	1
121	FPC010YB001	STUD COUPLING	1
122	VFA006NV001	LOWERING VALVE	1
123	WAC010HD000	DOWTY WASHER	2
124	WAC007HD000	DOWTY WASHER	1
126	FPC006DN001	COMPRESSION ELBOW	1
128	FAS006GJ010	1/4 INCH BLANKING PLUG	1

ITEMS MARKED X ARE ONLY AVAILABLE IN SERVICE KIT HDA150TP1-K

IMPORTANT

WHEN ORDERING SPARES YOU MUST STATE THE FULL PART NUMBER AND THE PRODUCT SERIAL NUMBER - FROM THE LABEL
TO PROTECT YOUR WARRANTY ALWAYS USE GENUINE HI-FORCE PARTS.

Hi-Force HYDRAULIC TOOLS	DOUBLE ACTING CYLINDER FOR TOUGHLIFT	SERIAL NUMBERS ALL	SPARE PARTS LIST NO. HDA15015TL SHEET 1 OF 2 SHEETS

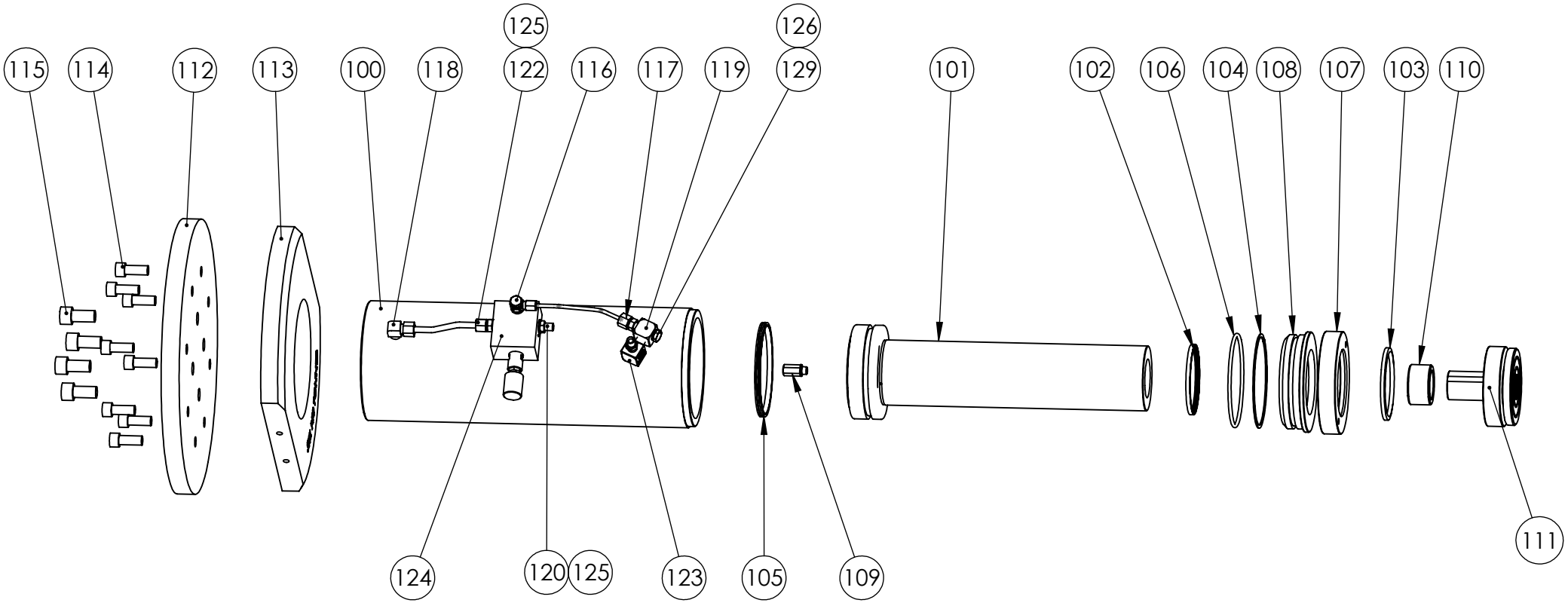

IMPORTANT

WHEN ORDERING SPARES YOU MUST STATE THE FULL PART NUMBER AND THE PRODUCT SERIAL NUMBER - FROM THE LABEL

TO PROTECT YOUR WARRANTY ALWAYS USE GENUINE HI-FORCE PARTS.

www.hi-force.com

Hi-Force HYDRAULIC TOOLS	DOUBLE ACTING CYLINDER FOR TOUGHLIFT	SERIAL NUMBERS ALL	SPARE PARTS LIST NO. HDA15015TL SHEET 2 OF 2 SHEETS

ITEM NO.	PART NUMBER	DESCRIPTION	QTY.
100	CBC165AP001	CYLINDER	1
101	PRC165VP001	PISTON.	1
102	X	ROD SEAL	1
103	X	WIPER	1
104	X	BACK UP RING	1
105	X	PISTON SEAL	1
106	X	O - RING	1
107	SRC114WQ002	STOP RING	1
108	SSC165EA001	SEAL RETAINER.	1
109	VRA700AF002	RELIEF VALVE	1
110	ADC150PA001	ADAPTOR	1
111	TLS150	TILTING SADDLE	1
112	ADC200BC001	BASE PLATE	1
113	ADC150BC001	INTERMEDIATE PLATE	1
114	BLC016ND040	SOCKET CAP HD SCREW	8
115	BLC020PC040	SOCKET CAP HD SCREW	4
116	FPC006QB002	6MM BANJO	1
117	FPC006YN002	STUD COUPLING	1

ITEM NO.	PART NUMBER	DESCRIPTION	QTY.
118	FPC010DN001	STUD ELBOW	1
119	FPC010FZ003	ELBOW FITTING	1
120	FPC010NB001	REDUCER	1
121	FPC010NB002	REDUCER	1
122	FPC010YB001	STUD COUPLING	1
123	FPC010FZ002	3/8" M/F ELBOW	1
124	VFA006NV001	LOWERING VALVE	1
125	WAC010HD000	DOWTY WASHER	2
126	WAC007HD000	DOWTY WASHER	1
129	FAS006GJ010	1/4 INCH BLANKING PLUG	1

ITEMS MARKED X ARE AVAILABLE ONLY IN SERVICE KIT HDA150TP1-K

IMPORTANT

WHEN ORDERING SPARES YOU MUST STATE THE FULL PART NUMBER AND THE PRODUCT SERIAL NUMBER - FROM THE LABEL
TO PROTECT YOUR WARRANTY ALWAYS USE GENUINE HI-FORCE PARTS.

Hi-Force HYDRAULIC TOOLS	DOUBLE ACTING CYLINDER FOR TOUGHLIFT	SERIAL NUMBERS ALL	SPARE PARTS LIST NO. HDA10021TL SHEET 1 OF 2 SHEETS

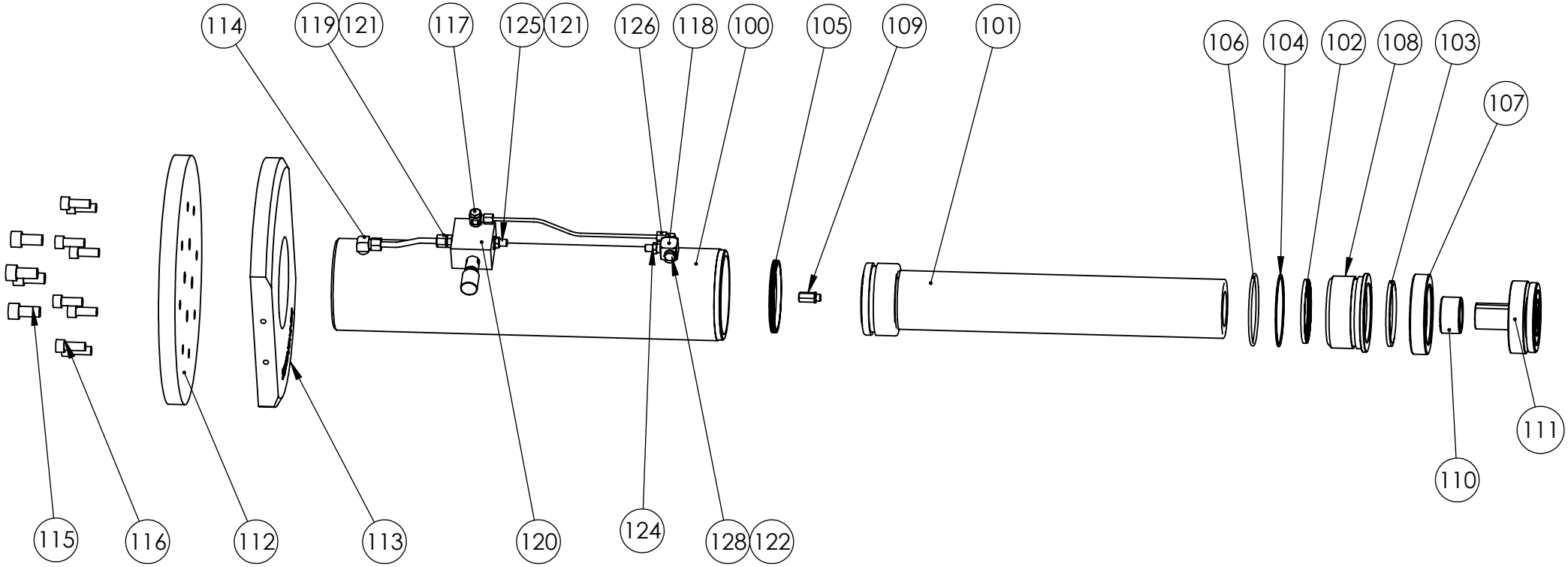

IMPORTANT

WHEN ORDERING SPARES YOU MUST STATE THE FULL PART NUMBER AND THE PRODUCT SERIAL NUMBER - FROM THE LABEL

TO PROTECT YOUR WARRANTY ALWAYS USE GENUINE HI-FORCE PARTS.

www.hi-force.com

Hi-Force HYDRAULIC TOOLS	DOUBLE ACTING CYLINDER FOR TOUGHLIFT	SERIAL NUMBERS	SPARE PARTS LIST NO. HDA10021TL SHEET 2 OF 2 SHEETS

ITEM NO.	PART NUMBER	DESCRIPTION	QTY.
100	CBC140AR002	CYLINDER	1
101	PRC140VR004	PISTON	1
102	x	ROD SEAL	1
103	x	WIPER	1
104	x	BACK UP RING	1
105	x	PISTON SEAL	1
106	x	O - RING	1
107	SRC114WN001	STOP RING	1
108	SSC140EA004	SEAL RETAINER	1
109	VRA700AF002	RELIEF VALVE	1
110	ADC150PA001	ADAPTOR	1
111	TLS150	TILTING SADDLE	1
112	ADC200BC001	BASE PLATE	1
113	ADC100BC001	INTERMEDIATE PLATE	1
114	FPC010DN001	STUD ELBOW	1
115	BLC020PC040	SOCKET CAP HD SCREW	4
116	BLC016ND040	SOCKET CAP HD SCREW	8
117	FPC006QB002	6MM BANJO	1
118	FPC010FZ003	ELBOW FITTING	1
119	FPC010YB001	STUD COUPLING	1
120	VFA006NV001	LOWERING VALVE	1
121	WAC010HD000	DOWTY WASHER	2

ITEM NO.	PART NUMBER	DESCRIPTION	QTY.
122	WAC007HD000	DOWTY WASHER	1
124	FPC010NB002	REDUCER	1
125	FPC010NB001	REDUCER	1
126	FPC006DN001	COMPRESSION ELBOW	1
128	FAS006GJ010	1/4 INCH BLANKING PLUG	1

ITEMS MARKED X ARE AVAILABLE ONLY IN SERVICE KIT HDA100TP1-K

IMPORTANT

WHEN ORDERING SPARES YOU MUST STATE THE FULL PART NUMBER AND THE PRODUCT SERIAL NUMBER - FROM THE LABEL

TO PROTECT YOUR WARRANTY ALWAYS USE GENUINE HI-FORCE PARTS.

Hi-Force HYDRAULIC TOOLS	DOUBLE ACTING CYLINDER FOR TOUGHLIFT	SERIAL NUMBERS ALL	SPARE PARTS LIST NO. HDA10016TL SHEET 1 OF 2

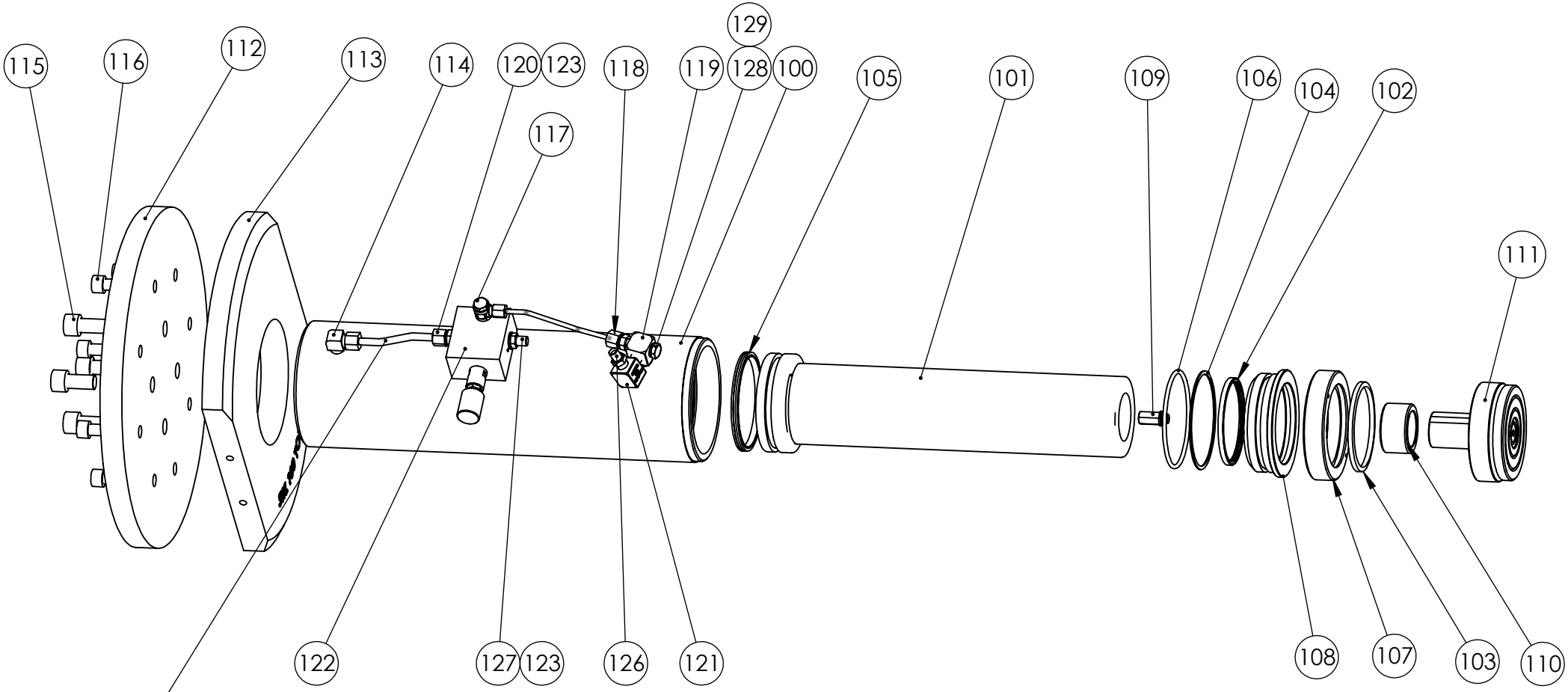

PIPES NOT AVAILABLE AS SPARE PARTS

IMPORTANT

WHEN ORDERING SPARES YOU MUST STATE THE FULL PART NUMBER AND THE PRODUCT SERIAL NUMBER - FROM THE LABEL

TO PROTECT YOUR WARRANTY ALWAYS USE GENUINE HI-FORCE PARTS.

www.hi-force.com

Hi-Force HYDRAULIC TOOLS	DOUBLE ACTING CYLINDER FOR TOUGHLIFT	SERIAL NUMBERS ALL	SPARE PARTS LIST NO. HDA10016TL

ITEM NO.	PART NUMBER	DESCRIPTION	QTY.
100	CBC140AQ002	CYLINDER	1
101	PRC140VQ002	PISTON	1
102	X	ROD SEAL	1
103	X	WIPER	1
104	X	BACK UP RING	1
105	X	PISTON SEAL	1
106	X	O - RING	1
107	SRC114WN001	STOP RING	1
108	SSC140EA001	SEAL RETAINER	1
109	VRA700AF002	RELIEF VALVE	1
110	ADC150PA001	ADAPTOR	1
111	TLS150	TILTING SADDLE	1
112	ADC200BC001	BASE PLATE	1
113	ADC100BC001	INTERMEDIATE PLATE	1
114	FPC010DN001	STUD ELBOW	1
115	BLC020PC040	SOCKET CAP HD SCREW	4
116	BLC016ND040	SOCKET CAP HD SCREW	8
117	FPC006QB002	6MM BANJO	1

ITEM NO.	PART NUMBER	DESCRIPTION	QTY.
118	FPC006YN002	STUD COUPLING	1
119	FPC010FZ003	ELBOW FITTING	1
120	FPC010YB001	STUD COUPLING	1
121	FPC010FZ002	3/8" M/F ELBOW	1
122	VFA006NV001	LOWERING VALVE	1
123	WAC010HD000	DOWTY WASHER	2
126	FPC010NB002	REDUCER	1
127	FPC010NB001	REDUCER	1
128	FAS006GJ010	1/4 INCH BLANKING PLUG	1
129	WAC007HD000	DOWTY WASHER	1

ITEMS MARKED X ARE AVAILABLE ONLY IN SERVICE KIT HDA100TP1-K

IMPORTANT

WHEN ORDERING SPARES YOU MUST STATE THE FULL PART NUMBER AND THE PRODUCT SERIAL NUMBER - FROM THE LABEL

TO PROTECT YOUR WARRANTY ALWAYS USE GENUINE HI-FORCE PARTS.

Hi-Force HYDRAULIC TOOLS	DOUBLE ACTING CYLINDER FOR TOUGHLIFT	SERIAL NUMBERS ALL	SPARE PARTS LIST NO. HDA10016TL SHEET 1 OF 2

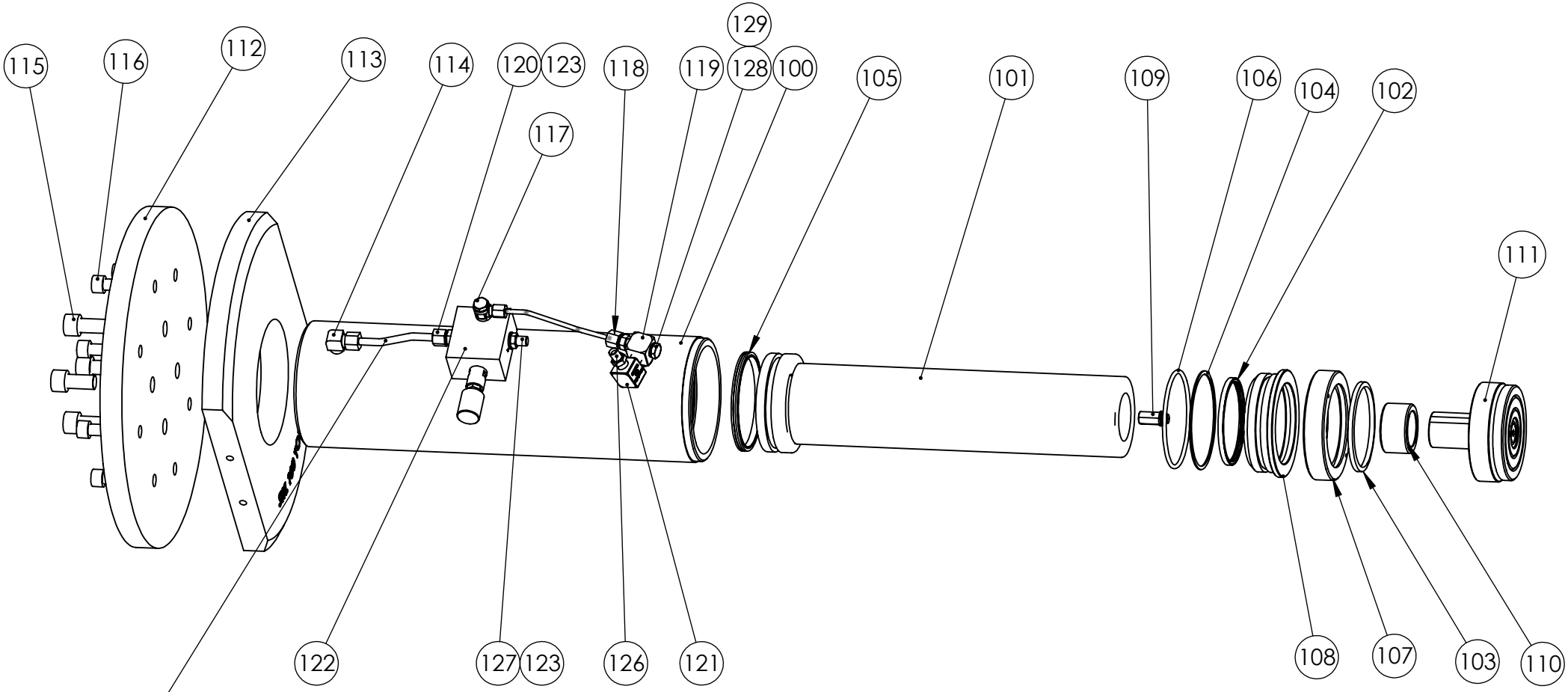

PIPES NOT AVAILABLE AS SPARE PARTS

IMPORTANT

WHEN ORDERING SPARES YOU MUST STATE THE FULL PART NUMBER AND THE PRODUCT SERIAL NUMBER - FROM THE LABEL

TO PROTECT YOUR WARRANTY ALWAYS USE GENUINE HI-FORCE PARTS.

www.hi-force.com

Hi-Force HYDRAULIC TOOLS	DOUBLE ACTING CYLINDER FOR TOUGHLIFT	SERIAL NUMBERS ALL	SPARE PARTS LIST NO. HDA10016TL

ITEM NO.	PART NUMBER	DESCRIPTION	QTY.
100	CBC140AQ002	CYLINDER	1
101	PRC140VQ002	PISTON	1
102	X	ROD SEAL	1
103	X	WIPER	1
104	X	BACK UP RING	1
105	X	PISTON SEAL	1
106	X	O - RING	1
107	SRC114WN001	STOP RING	1
108	SSC140EA001	SEAL RETAINER	1
109	VRA700AF002	RELIEF VALVE	1
110	ADC150PA001	ADAPTOR	1
111	TLS150	TILTING SADDLE	1
112	ADC200BC001	BASE PLATE	1
113	ADC100BC001	INTERMEDIATE PLATE	1
114	FPC010DN001	STUD ELBOW	1
115	BLC020PC040	SOCKET CAP HD SCREW	4
116	BLC016ND040	SOCKET CAP HD SCREW	8
117	FPC006QB002	6MM BANJO	1

ITEM NO.	PART NUMBER	DESCRIPTION	QTY.
118	FPC006YN002	STUD COUPLING	1
119	FPC010FZ003	ELBOW FITTING	1
120	FPC010YB001	STUD COUPLING	1
121	FPC010FZ002	3/8" M/F ELBOW	1
122	VFA006NV001	LOWERING VALVE	1
123	WAC010HD000	DOWTY WASHER	2
126	FPC010NB002	REDUCER	1
127	FPC010NB001	REDUCER	1
128	FAS006GJ010	1/4 INCH BLANKING PLUG	1
129	WAC007HD000	DOWTY WASHER	1

ITEMS MARKED X ARE AVAILABLE ONLY IN SERVICE KIT HDA100TP1-K

IMPORTANT

WHEN ORDERING SPARES YOU MUST STATE THE FULL PART NUMBER AND THE PRODUCT SERIAL NUMBER - FROM THE LABEL

TO PROTECT YOUR WARRANTY ALWAYS USE GENUINE HI-FORCE PARTS.

Hi-Force HYDRAULIC TOOLS	100, 150 & 200 TONNE TOUGHLIFT - AIR DRIVEN	SERIAL NUMBERS ALL	SPARE PARTS LIST NO. TL100A-TL200AP1

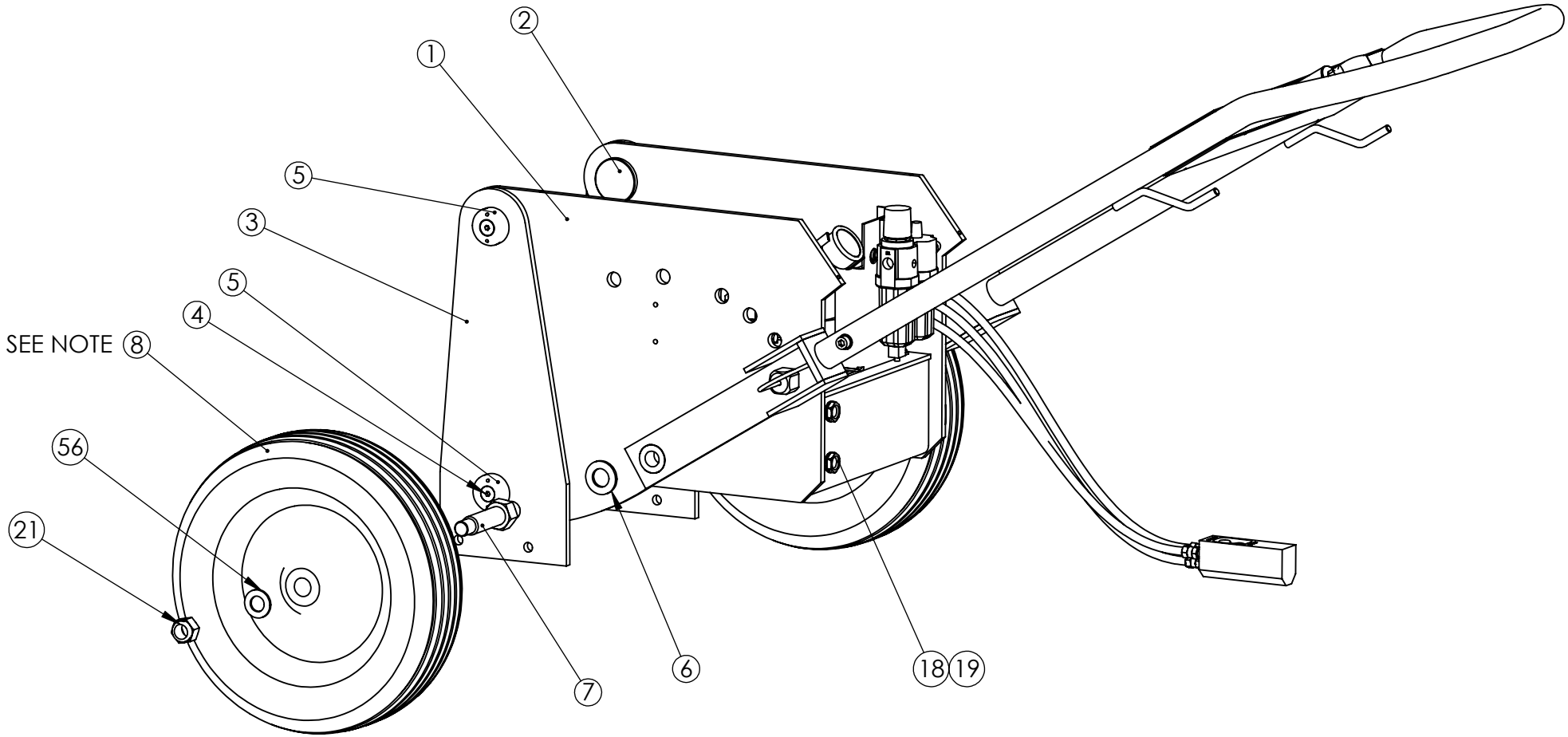

EARLY VERSIONS OF TOUGHLIFTS HAVE
PNEUMATIC TYRES. THESE HAVE BEEN CHANGED TO SOLID
TYRES. IF ORDERING A REPALCEMENT FOR A PNEUMATIC TYRED WHEEL
THEN YOU MUST ORDER A PAIR TO AVOID MIS MATCH.
SOLID TYRED WHEELS CAN BE REPLACED SINGLY.

IMPORTANT

WHEN ORDERING SPARES YOU MUST STATE THE FULL PART NUMBER AND THE PRODUCT SERIAL NUMBER - FROM THE LABEL
TO PROTECT YOUR WARRANTY ALWAYS USE GENUINE HI-FORCE PARTS.

www.hi-force.com

Hi-Force HYDRAULIC TOOLS	100, 150 & 200 TONNE TOUGHLIFT - AIR DRIVEN	SERIAL NUMBERS ALL	SPARE PARTS LIST NO. TL100A-TL200AP1

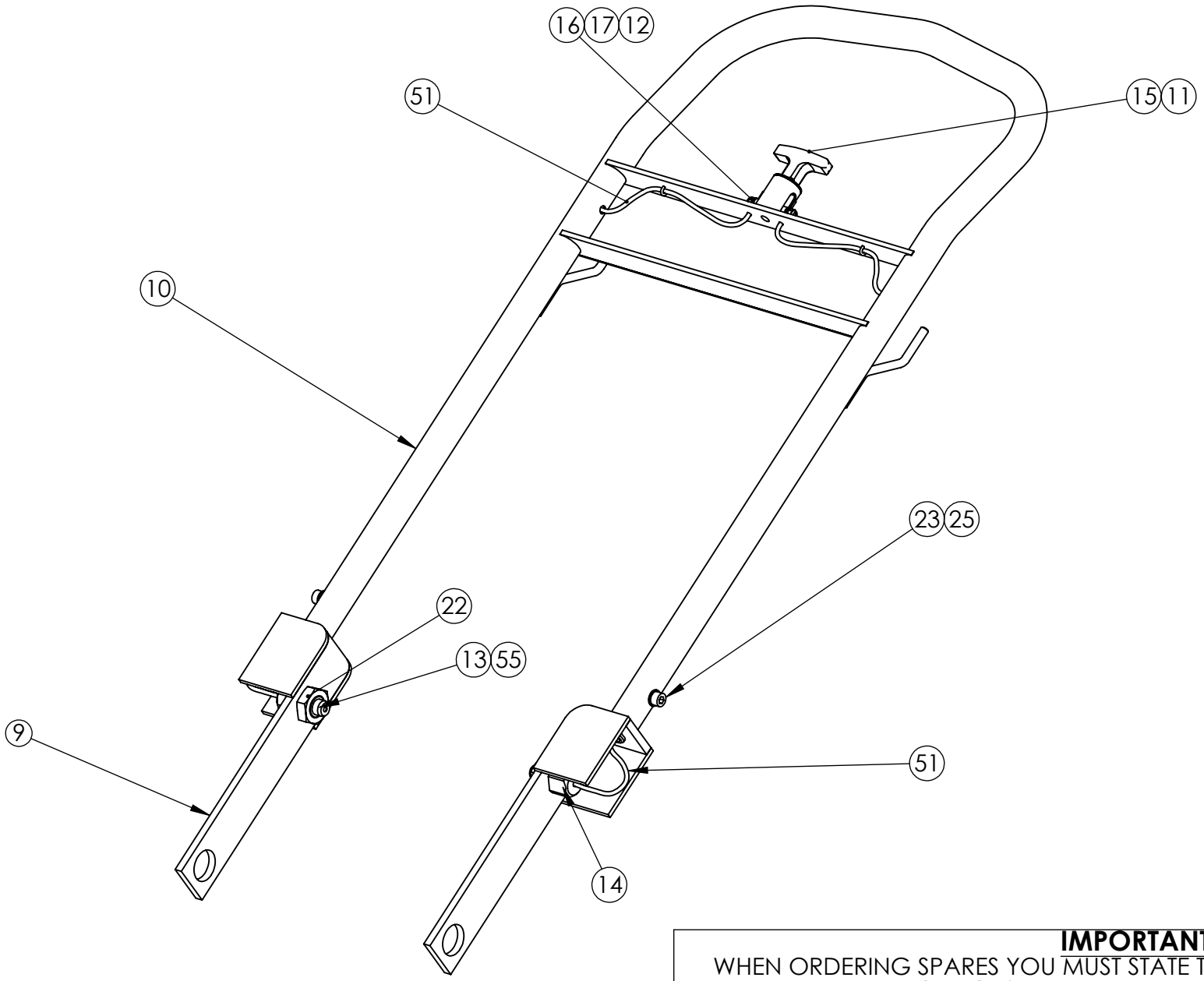

IMPORTANT

WHEN ORDERING SPARES YOU MUST STATE THE FULL PART NUMBER AND THE PRODUCT SERIAL NUMBER - FROM THE LABEL

TO PROTECT YOUR WARRANTY ALWAYS USE GENUINE HI-FORCE PARTS.

www.hi-force.com

Hi-Force HYDRAULIC TOOLS	100, 150 & 200 TONNE TOUGHLIFT - AIR DRIVEN	SERIAL NUMBERS ALL	SPARE PARTS LIST NO. TL100A-TL200AP1

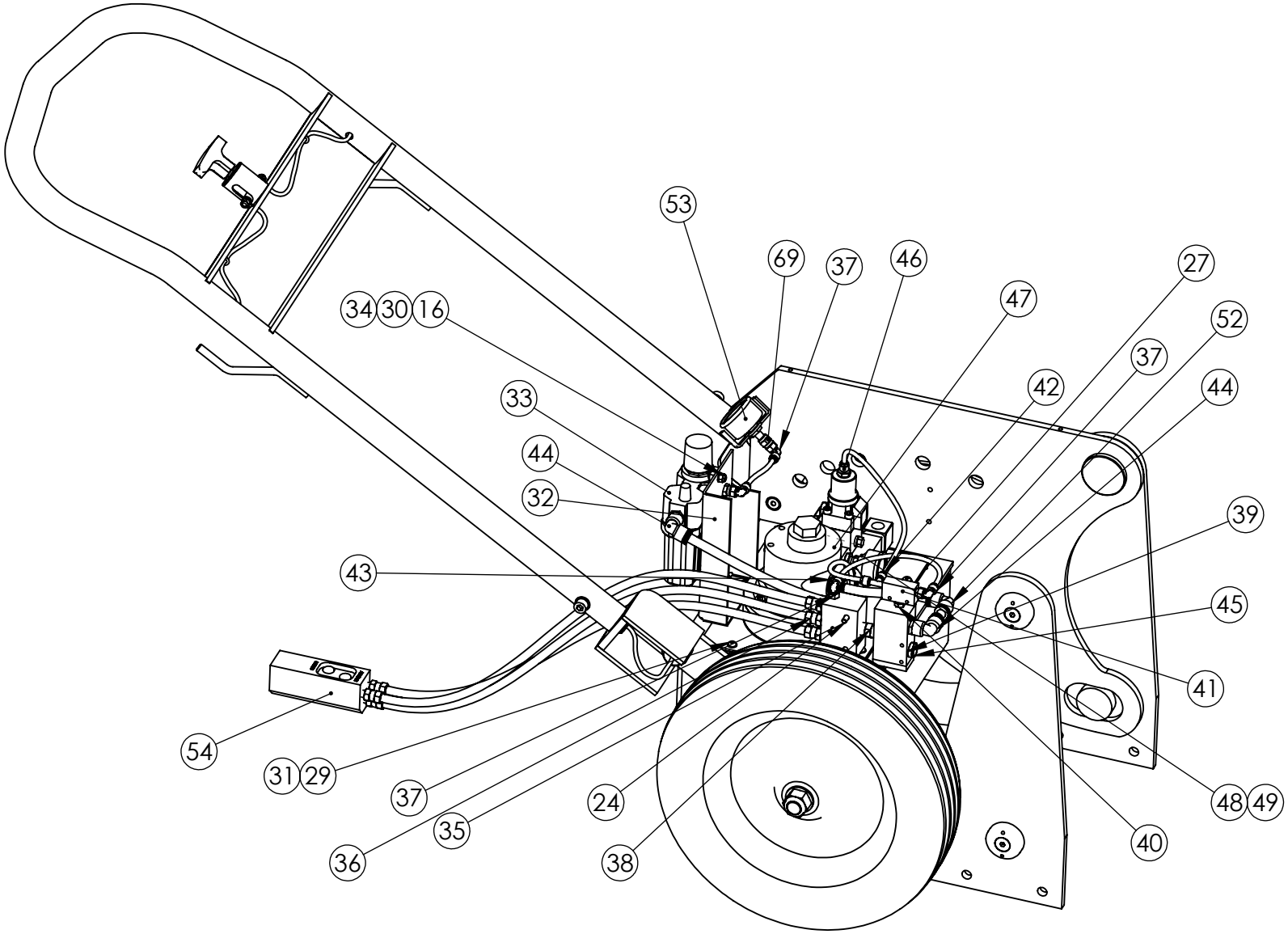

IMPORTANT

WHEN ORDERING SPARES YOU MUST STATE THE FULL PART NUMBER AND THE PRODUCT SERIAL NUMBER - FROM THE LABEL

TO PROTECT YOUR WARRANTY ALWAYS USE GENUINE HI-FORCE PARTS.

www.hi-force.com

Hi-Force HYDRAULIC TOOLS

100, 150 & 200 TONNE TOUGHLIFT - AIR DRIVEN

SERIAL NUMBERS
ALL

SPARE PARTS LIST NO.
TL100A-TL200AP1

ITEM NO.	PART NUMBER	DESCRIPTION	QTY.
1	SFS262HD001	FRAME WELD ASSY	1
2	SFC060RA001	UPPER PIN	2
3	SFC190JE001	PIVOT PLATE	2
4	SFC050RA001	LOWER PIN	2
5	NUC024LS001	NUT	4
6	WAC024AB000	PLAIN WASHER	2
7	PCC025AJ001	STUB AXLE	2
8	BSC025WW001	WHEEL	2
9	SFS060FD003	HANDLE BRACKET W/ASSY	2
10	HLS038TS001	HANDLE ASSEMBLY	1
11	PCC010AJ001	RELEASE ROD	1
12	PCC012AH001	CABLE CLAMP	1
13	PCC019FH001	LATCH PIN	2
14	SFC035RA001	LATCH SLEEVE	2
15	HLC010PM001	RELEASE HANDLE	1
16	NUC006JC000	NYLOK NUT	4
17	WAC006AS002	CLAMP WASHER	2
18	BLC021YT010	SIGHT GLASS	2
19	NUC021-B000	THIN NUT	2
20	FPC013PC001	PLUG	1
21	NUC020PC000	NYLOK NUT	2
22	NUC027QB001	THIN NUT	2
23	BLC010LD016	SOCKET CAP HD SCREW	2
24	BLC006JC040	SOCKET CAP HD SCREW	2
25	WAC010AB000	PLAIN WASHER	2
27	Z	GASKET	2

ITEMS MARKED Z ARE AVAILABLE ONLY IN SERVICE KIT TLATP1-K

IMPORTANT

WHEN ORDERING SPARES YOU MUST STATE THE FULL PART NUMBER AND THE PRODUCT SERIAL NUMBER - FROM THE LABEL
TO PROTECT YOUR WARRANTY ALWAYS USE GENUINE HI-FORCE PARTS.

Hi-Force HYDRAULIC TOOLS

100, 150 & 200 TONNE TOUGHLIFT - AIR DRIVEN

SERIAL NUMBERS

ALL

SPARE PARTS LIST NO.

TL100A-TL200AP1

ITEM NO.	PART NUMBER	DESCRIPTION	QTY.
29	BLC006JH016	BUTTON HEAD SCREW	10
30	BLC006JH020	BUTTON HEAD SCREW	2
31	WAC006EB000	WASHER	10
32	SFC110HB002	REGULATOR BRACKET	1
33	MCC000AF005	FRL UNIT	1
34	WAC006AF000	WASHER	4
35	VFC010BN001	MANIFOLD BLOCK	1
36	FPC003AC002	SWIVEL CONNECTOR	3
37	FPC010DM001	STUD ELBOW (AIR)	5
38	FPC010AN003	ADAPTOR	1
39	VFA013CD002	PILOT OPERATED VALVE	1
40	FPC003NC001	NIPPLE	2
41	VFA003CS002	SHUTTLE VALVE	1
42	FPC010UM001	TEE	1
43	FPC012WS001	STUD 3/8 BSP TO 12MM PUSH	1
44	FPC010DS001	CONNECTOR	3
45	Z	SILENCER	1
46	FPC006YC001	STUD COUPLING (AIR)	1
47	AM3	MOTOR	1
48	AM3-M	AIR MOTOR MUFFLER	1
49	AM3-MR	AIR MOTOR MUFFLER REDUCER	1
50	DCSF00328	MAGNET	1
51	Z	CABLE ASSY	2

ITEM NO.	PART NUMBER	DESCRIPTION	QTY.
52	FPC012DS001	ELBOW	1
53	HG160T	AIR PRESSURE GAUGE	1
54	MCC000AC002	HOSE AND PENDANT ASSEY	1
55	SPC009CC001	SPRING	2
56	WAC020AB000	M20 PL WASHER	2
57	BPC010SP002	FILLER	1
69	FPC003AC001	SOCKET	2

ITEMS MARKED Z ARE AVAILABLE ONLY
IN SERVICE KIT TLATP1-K

IMPORTANT

WHEN ORDERING SPARES YOU MUST STATE THE FULL PART NUMBER AND THE PRODUCT SERIAL NUMBER - FROM THE LABEL
TO PROTECT YOUR WARRANTY ALWAYS USE GENUINE HI-FORCE PARTS.

Hi-Force HYDRAULIC TOOLS	100, 150 & 200 TONNE TOUGHLIFT - AIR DRIVEN	SERIAL NUMBERS ALL	SPARE PARTS LIST NO. TL100A-TL200AP1

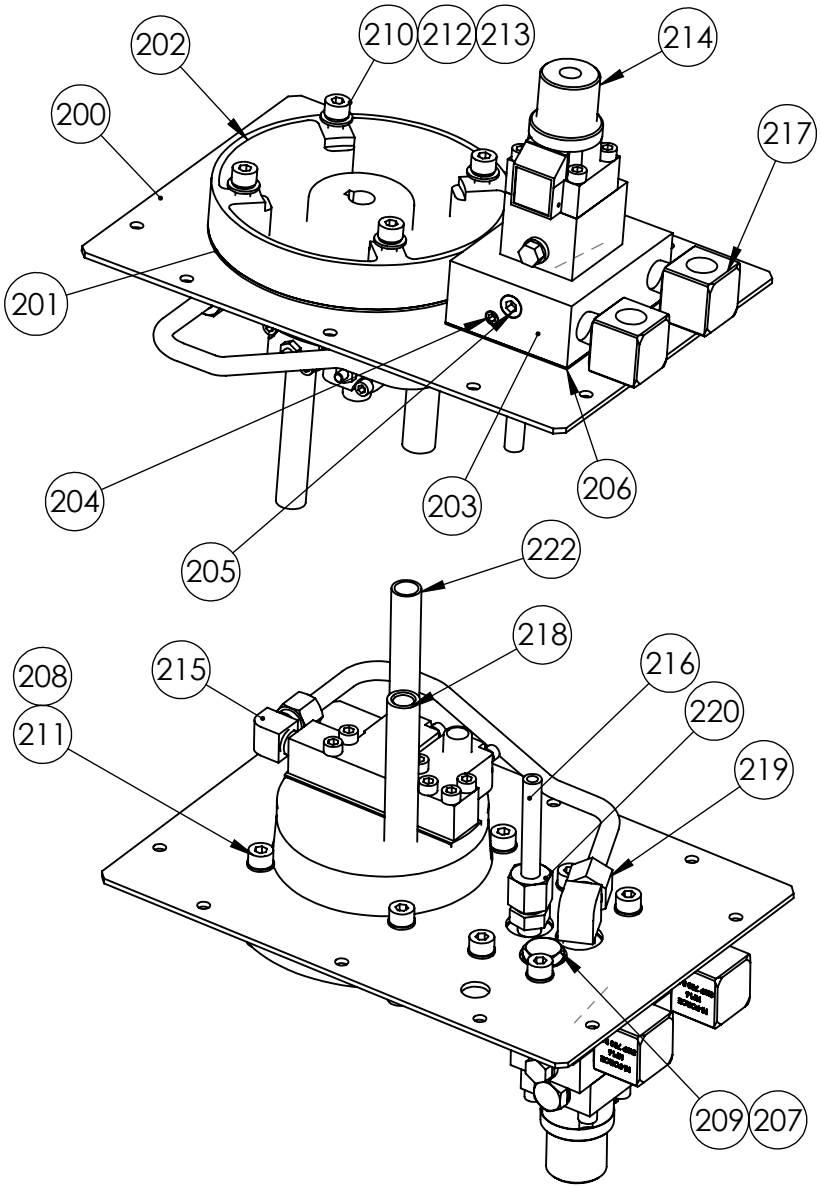

ITEM NO.	PART NUMBER	DESCRIPTION	QTY.
200	TAC008BS002	TANK LID	1
201	Z	MOTOR GASKET	1
202	PMC014CF002	PUMP UNIT	1
203	VFC010RD006	SUB PLATE	1
204	FPC002PN001	PLUG	1
205	FPC006PN001	PLUG	4
206	Z	GASKET	1
207	Z	DOWTY WASHER	1
208	Z	DOWTY WASHER	8
209	FAS006GJ010	1/4 INCH BLANKING PLUG	1
210	BLC008KD020	SOCKET CAP HD SCREW	4
211	BLC008KD016	SOCKET CAP HD SCREW	8
212	WAC008AB000	M8 WASHER	4
213	WAC008BB000	M8 SPRING WASHER	4
214	VFC000CD003	4/2 VALVE	1
215	FPC006DB001	FITTING	1
216	HOC006PS020	TUBE	1
217	HF16	3/8" M/F ELBOW	2
218	TAC000PA005	SUCTION PIPE	1
219	FPC010DN001	STUD ELBOW	1
220	FPC006YN001	STUD COUPLING	1
222	HOC015PC003	TUBE	1

IMPORTANT

WHEN ORDERING SPARES YOU MUST STATE THE FULL PART NUMBER AND THE PRODUCT SERIAL NUMBER - FROM THE LABEL
TO PROTECT YOUR WARRANTY ALWAYS USE GENUINE HI-FORCE PARTS.

www.hi-force.com