Hi-Force HYDRAULIC TOOLS

3 SPEED TORQUE PUMP

SERIAL NUMBERS
FROM BG 0925

SPARE PARTS LIST NO.
TPA07D EVD

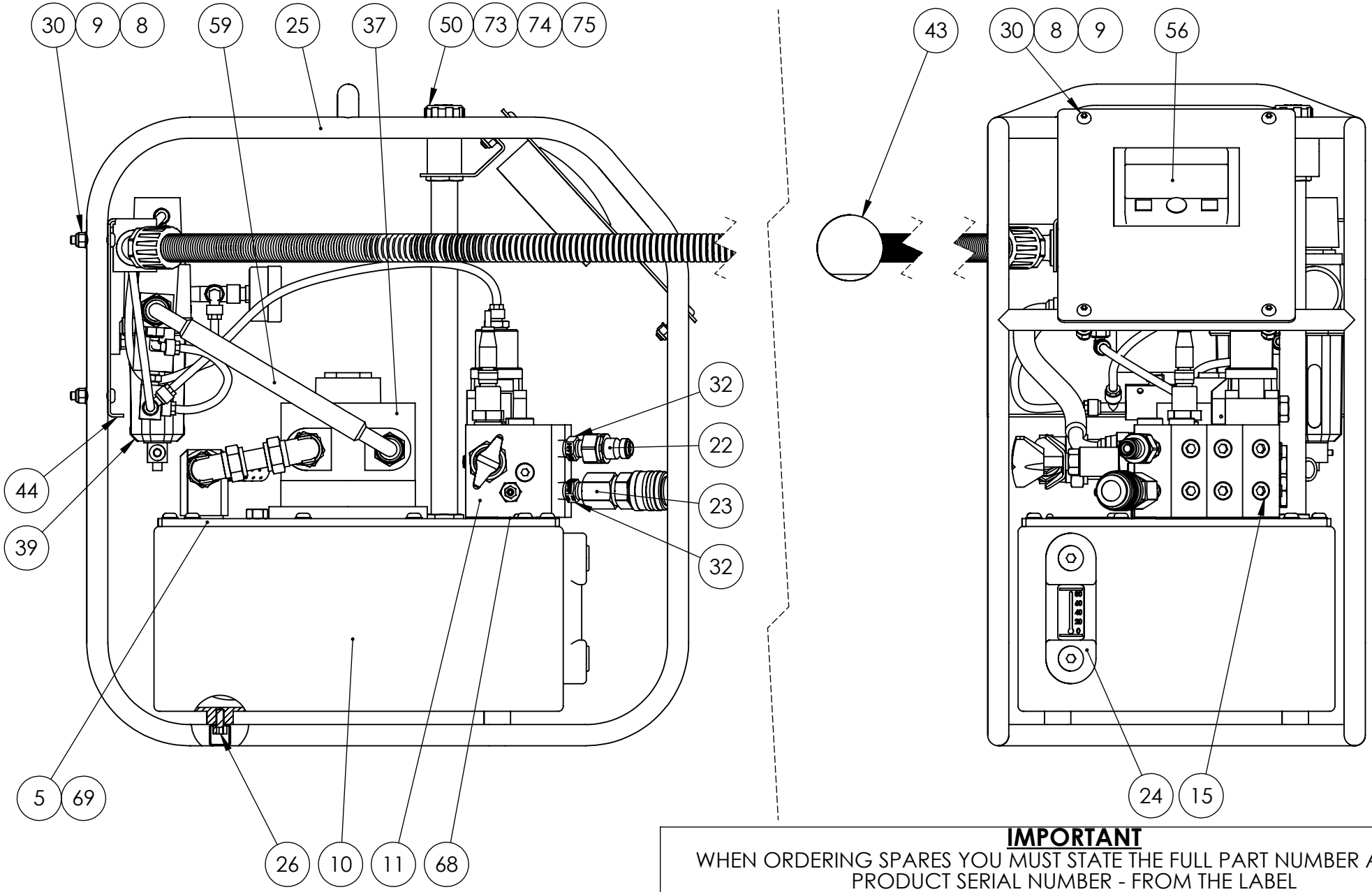

REVISION	
1	4753
2	5212
3	5597
4	6329
5	
6	
7	
8	
9	
10	
11	
12	
13	
14	
15	
16	
17	
18	
19	
20	

IMPORTANT

WHEN ORDERING SPARES YOU MUST STATE THE FULL PART NUMBER AND THE PRODUCT SERIAL NUMBER - FROM THE LABEL
TO PROTECT YOUR WARRANTY ALWAYS USE GENUINE HI-FORCE PARTS.

www.hi-force.com

Hi-Force HYDRAULIC TOOLS

SERIAL NUMBERS
FROM BG 0925

SPARE PARTS LIST NO.
TPA07D EVD

ITEM NO.	PART NUMBER	DESCRIPTION	QTY.
1	PMA019DT001	PUMP HEART	1
2	FFS124MY001	FILTER WELD ASSEMBLY	1
3	FFC123EY001	STRAINER	1
4	BLC004-H008	BUTTON HEAD SCREW	4
5	TAC007BL001	TANK LID	1
6	BLC005HF010	SKT CSK SCREW	2
7	BLC006ST000	M6X35MM ENGINEERING STUD	4
8	WAC006AF000	WASHER	14
9	NUC006JC000	NYLOK NUT	14
10	TAC007AL001	OIL RESERVOIR	1
11	VFC006RN002	VALVE BLOCK	1
12	FPC008PM003	PLUG	14
13	VRC700ZE002	ADJUSTABLE RELIEF VALVE	1
14	VRC080ZF001	LOW PRESSURE RELIEF VALVE	1
15	FPC006PN002	PLUG	6
16	FPC006YW001	COUPLING BODY	1
17	BAC005SN001	3/16 BALL	2
18	FAS006ME006	CUP PT SCREW	2
19	VFA000LH001	PILOT OPERATED VALVE	2
20	HOC006AB005	RETURN HOSE	2
21	SEC008RA002	O-RING	14
22	CM4F	COUPLER	1
23	CF4F	COUPLER	1
24	TAC000FT006	LEVEL TEMP GAUGE	1
25	TAC007CS001	ROLL FRAME	1
26	BLC006JC012	SOCKET CAP HD SCREW	8
27	WAC006EB000	WASHER	12
28	BLC006JH018	BUTTON HEAD SCREW	12
29	X	DOWTY WASHER	2
30	BLC006JH030	BUTTON HEAD SCREW	8
31	HOC010PS002	PRE BENT TUBE ASSEMBLY	1
32	HF7	1/4" NPT MALE ADAPTOR	2
33	FPC010NB001	REDUCER	1
34	FPC003PB001	BLANKING PLUG	1
35	VFA003CS002	SHUTTLE VALVE	1
36	VFA013CD003	PILOT OPERATED VALVE	1
37	AM5	MOTOR (SEE NOTE)	1
38	FPC010NC001	NIPPLE	1
39	MCC000AF005	FILTER REGULATOR LUBRICATOR	1
40	FPC010AN003	ADAPTOR	2
41	FPC003NC001	NIPPLE	1

ITEM NO.	PART NUMBER	DESCRIPTION	QTY.
42	VFC000CD011	AIR PILOT VALVE	1
43	VFA003BH002	AIR PENDANT ASSEMBLY	1
44	SFC150CC001	MOUNTING PLATE	1
45	FPC010LK001	MALE CONNECTOR	2
46	FPC013ZB001	ELBOW	2
47	X	DOWTY WASHER	2
48	WAC010HD000	DOWTY WASHER	2
49	HOC015PC005	TUBE ASSEMBLY	1
50	BPC020SP001	FILLER	1
51	FPC010DM001	STUD ELBOW (AIR)	4
52	FPC010UM001	TEE	1
53	FFC010RK001	SILENCER	1
54	FPC006YC001	STUD COUPLING (AIR)	1
55	NUC021-B000	THIN NUT	2
56	HDTG1A	DIGITAL GAUGE WITH TRANSDUCER	1
57	EMC024BA700	HIGH PRESSURE TRANSDUCER	1
58	X	O-RING	1
59	HOC010AB003	AIR HOSE	1
60	AAN000UP001	NAMEPLATE	1
61	FAS002HZ001	HAMMER DRIVE SCREW	2
62	FPC006PB002	BLANKING PLUG	2
63	FPC010EK001	COMPRESSION ELBOW	2
64	FPC003TB001	TEE	1
65	MCC000AF005.G	GAUGE	1
66	BLC006JH020	BUTTON HEAD SCREW	2
67	HOC010AB004	RETURN HOSE	1
68	X	VALVE GASKET	1
69	X	TANK GASKET	1
70	FPC012PM002	PLUG	1
71	SEC013RA001	O-RING	1
72	HOC010KS001	MUFFLER	1
73	FPC020AM002	BARREL	1
74	FPC020AM003	EXTENSION TUBE	1
75	NUC020LB000	LOCK NUT	2
76	SFC002HC003	FILLER BRACKET	1

REVISION	
1	4753
2	5212
3	5597
4	6329
5	
6	
7	
8	
9	
10	
11	
12	
13	
14	
15	
16	
17	
18	
19	
20	

PARTS MARKED X ARE AVAILABLE IN TPATP1-K SEAL KIT ONLY

NOTE:
SEAL KIT ALSO INCLUDES SERVICE KIT FOR AIR MOTOR

IMPORTANT

WHEN ORDERING SPARES YOU MUST STATE THE FULL PART NUMBER AND THE PRODUCT SERIAL NUMBER - FROM THE LABEL
TO PROTECT YOUR WARRANTY ALWAYS USE GENUINE HI-FORCE PARTS.

Hi-Force HYDRAULIC TOOLS	3 SPEED TORQUE PUMP	SERIAL NUMBERS FROM BG 0925	SPARE PARTS LIST NO. TPA07D EVD SHT 3 OF 9 SHTS

REVISION	
1	4753
2	5212
3	5597
4	6329
5	
6	
7	
8	
9	
10	
11	
12	
13	
14	
15	
16	
17	
18	
19	
20	

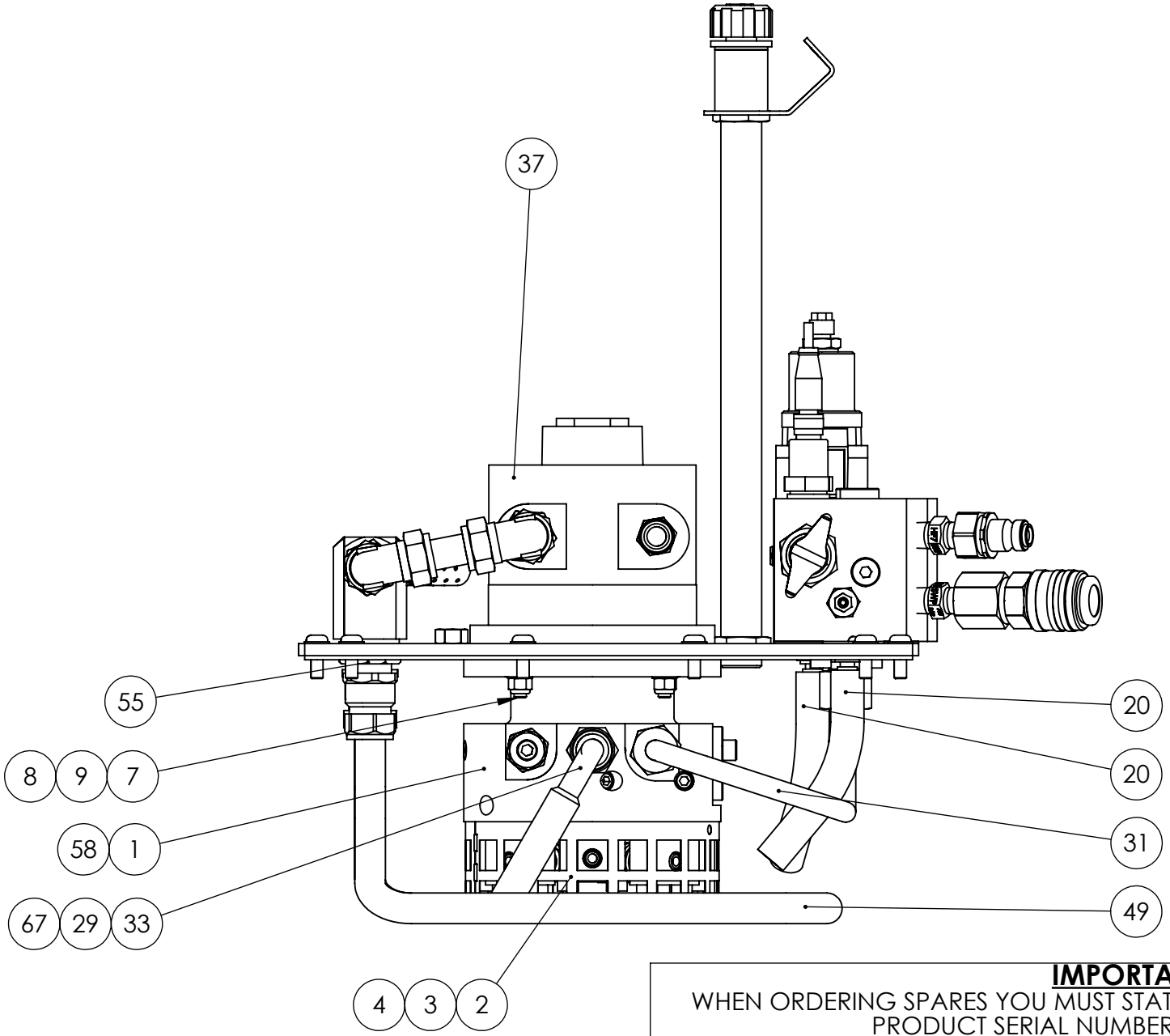

IMPORTANT

WHEN ORDERING SPARES YOU MUST STATE THE FULL PART NUMBER AND THE PRODUCT SERIAL NUMBER - FROM THE LABEL
TO PROTECT YOUR WARRANTY ALWAYS USE GENUINE HI-FORCE PARTS.

www.hi-force.com

Hi-Force HYDRAULIC TOOLS

3 SPEED TORQUE PUMP

SERIAL NUMBERS
FROM BG 0925

SPARE PARTS LIST NO.
TPA07D EVD

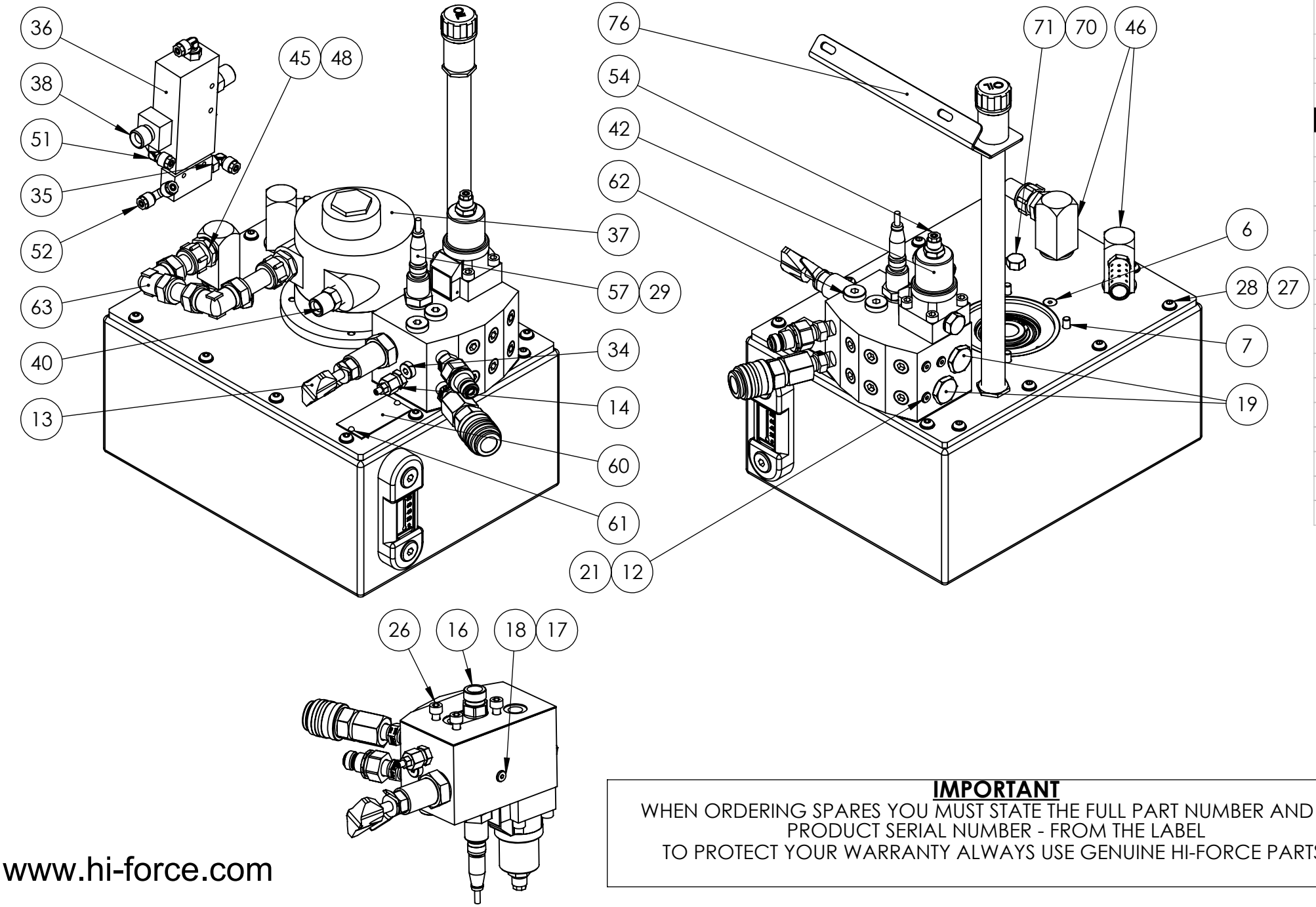

REVISION	
1	4753
2	5212
3	5597
4	6329
5	
6	
7	
8	
9	
10	
11	
12	
13	
14	
15	
16	
17	
18	
19	
20	

IMPORTANT

WHEN ORDERING SPARES YOU MUST STATE THE FULL PART NUMBER AND THE PRODUCT SERIAL NUMBER - FROM THE LABEL
TO PROTECT YOUR WARRANTY ALWAYS USE GENUINE HI-FORCE PARTS.

www.hi-force.com

Hi-Force HYDRAULIC TOOLS

3 SPEED TORQUE PUMP

SERIAL NUMBERS
FROM BG 0925

SPARE PARTS LIST NO.
TPA07D EVD

REVISION	
1	4753
2	5212
3	5597
4	6329
5	
6	
7	
8	
9	
10	
11	
12	
13	
14	
15	
16	
17	
18	
19	
20	

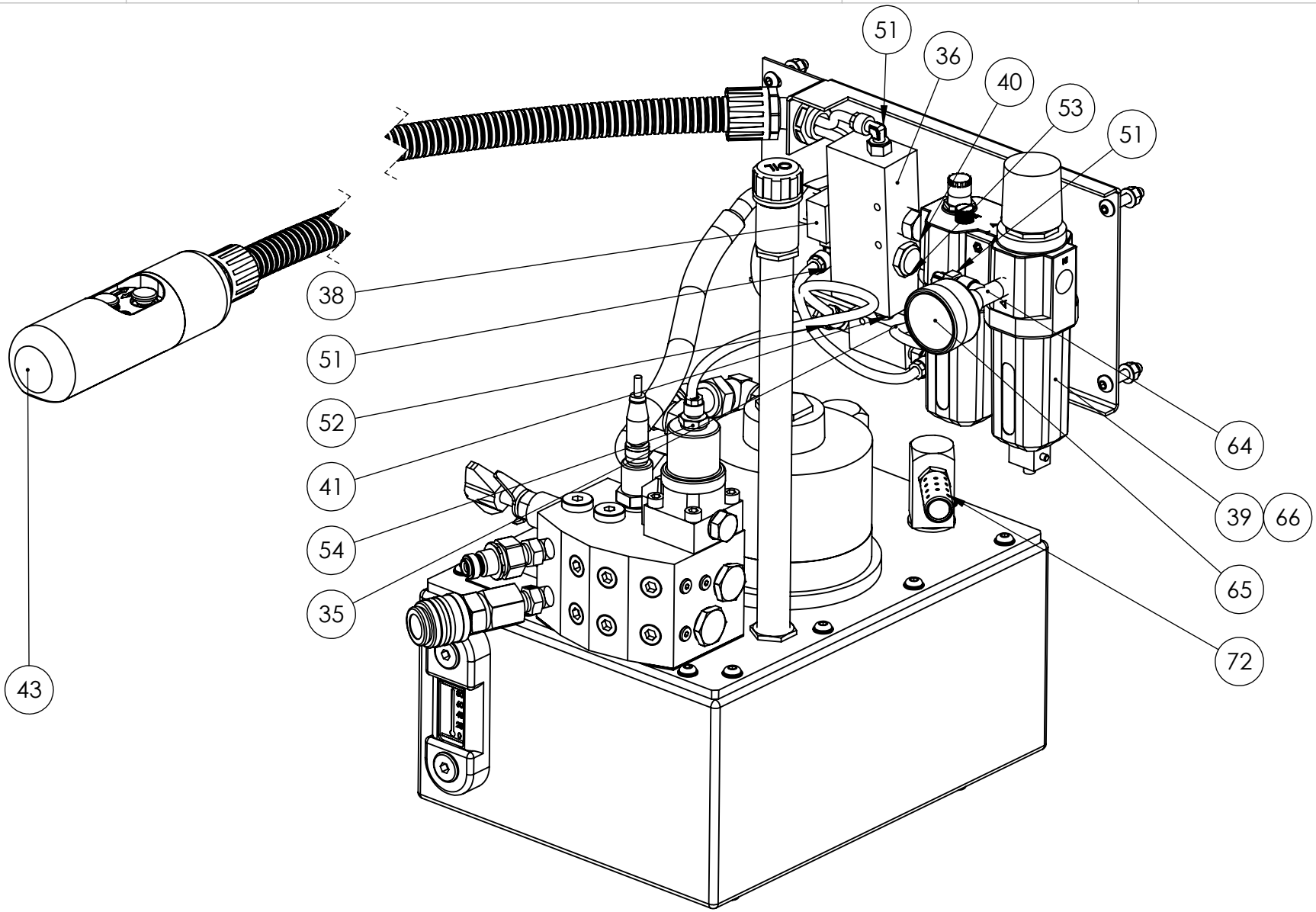

IMPORTANT

WHEN ORDERING SPARES YOU MUST STATE THE FULL PART NUMBER AND THE PRODUCT SERIAL NUMBER - FROM THE LABEL
TO PROTECT YOUR WARRANTY ALWAYS USE GENUINE HI-FORCE PARTS.

www.hi-force.com

REVISION	
1	4753
2	5212
3	5597
4	6329
5	
6	
7	
8	
9	
10	
11	
12	
13	
14	
15	
16	
17	
18	
19	
20	

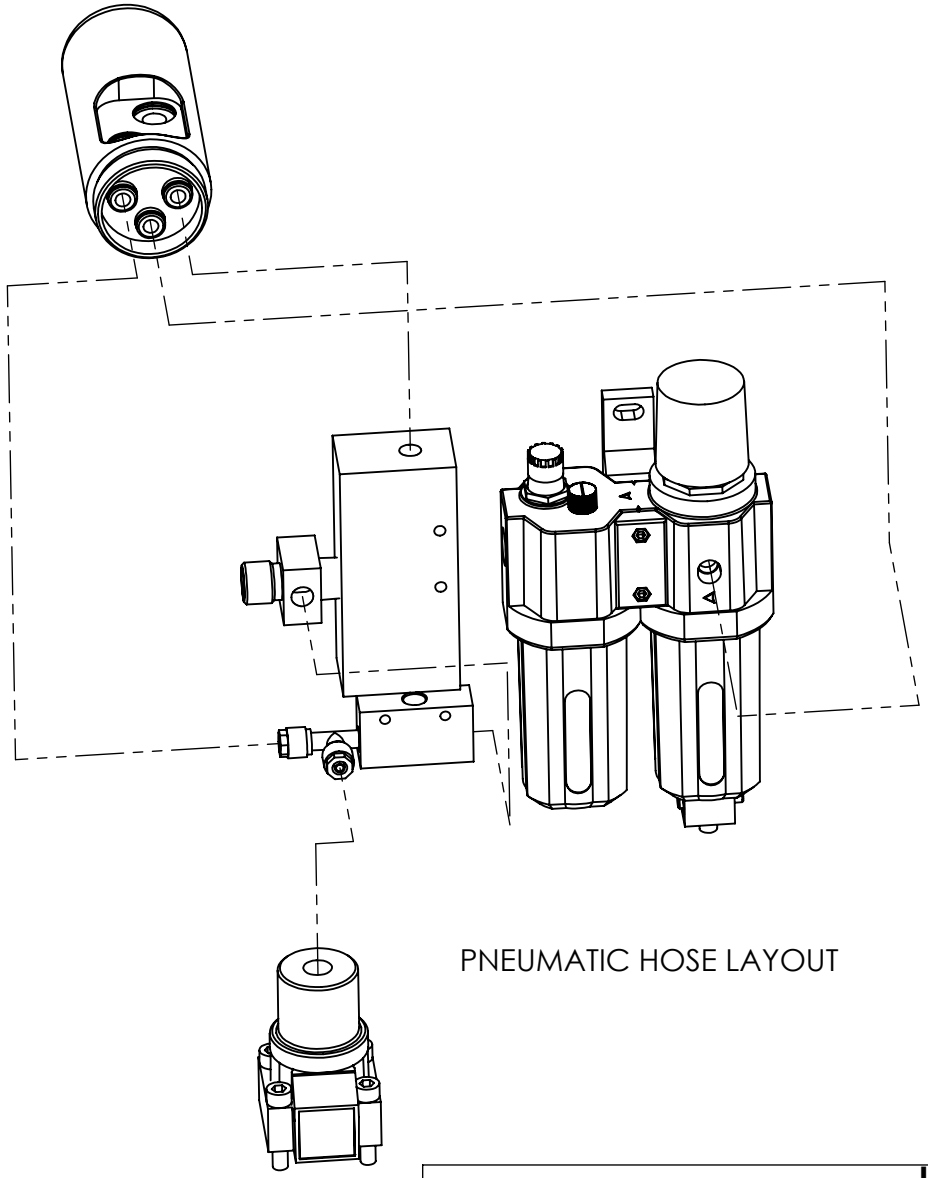

PNEUMATIC HOSE LAYOUT

IMPORTANT

WHEN ORDERING SPARES YOU MUST STATE THE FULL PART NUMBER AND THE PRODUCT SERIAL NUMBER - FROM THE LABEL
TO PROTECT YOUR WARRANTY ALWAYS USE GENUINE HI-FORCE PARTS.

Hi-Force HYDRAULIC TOOLS

3 SPEED TORQUE PUMP

SERIAL NUMBERS
FROM BG 0925

SPARE PARTS LIST NO.
TPA07D EVD

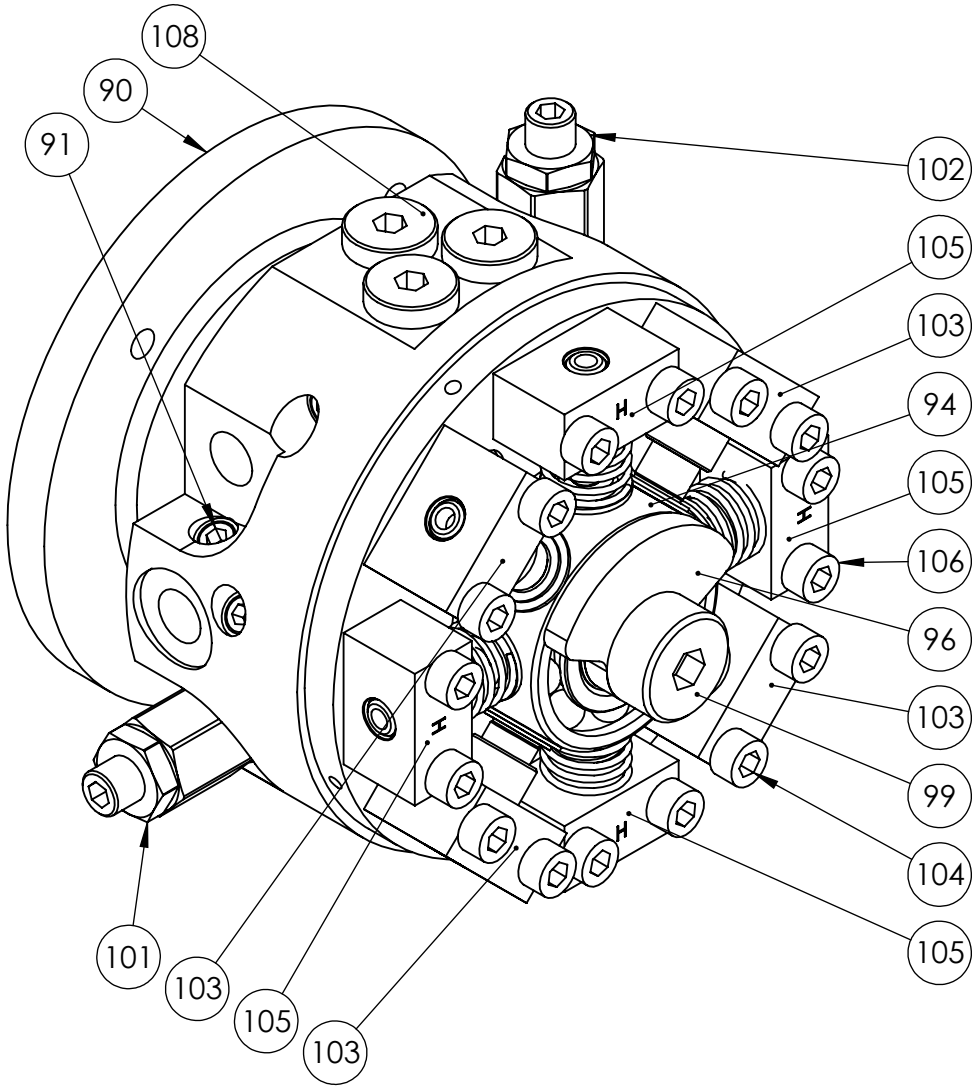

ITEM NO.	PART NUMBER	DESCRIPTION	QTY.
90	PMC000KM002	PUMP BODY	1
91	FPC002PN001	PLUG	11
92	PMC019SM001	DRIVE SHAFT	1
93	BSC030MC001	DEEP GROOVE BALL BEARING	1
94	BSC025ME001	DOUBLE ROW BEARING	1
95	BSC025NC001	CYLINDRICAL ROLLER BEARING	1
96	PMC019EM001	COUNTERWEIGHT	2
97	PMC019RM001	BUSH	1
98	PCC002FE001	LOCATING PIN	1
99	BLC016NS050	SHOULDER SCREW	1
100	VFA006FH001	CHECK VALVE	2
101	VRC065UF001	UNLOADING VALVE 65 BAR	1
102	VRC320UF001	UNLOADING VALVE 320 BAR	1
103	PEA011AA001	LP PISTON BLOCK	4
104	BLC006JD035	SOCKET CAP HD SCREW	8
105	PEA006AA002	HP PISTON BLOCK	4
106	BLC006JD030	SOCKET CAP HD SCREW	8
107	STC030CA002	CIRCLIP	1
108	FPC006PB002	BLANKING PLUG	3

REVISION	
1	4753
2	5212
3	5597
4	6329
5	
6	
7	
8	
9	
10	
11	
12	
13	
14	
15	
16	
17	
18	
19	
20	

IMPORTANT

WHEN ORDERING SPARES YOU MUST STATE THE FULL PART NUMBER AND THE PRODUCT SERIAL NUMBER - FROM THE LABEL
TO PROTECT YOUR WARRANTY ALWAYS USE GENUINE HI-FORCE PARTS.

Hi-Force HYDRAULIC TOOLS	3 SPEED TORQUE PUMP	SERIAL NUMBERS FROM BG 0925	SPARE PARTS LIST NO. TPA07D EVD SHT 8 OF 9 SHTS

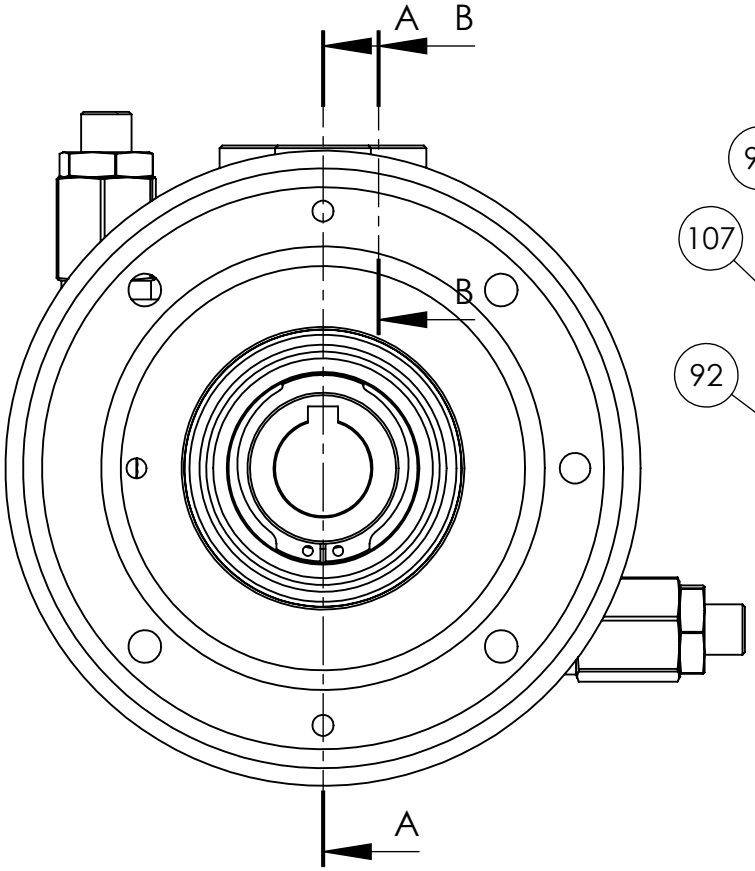

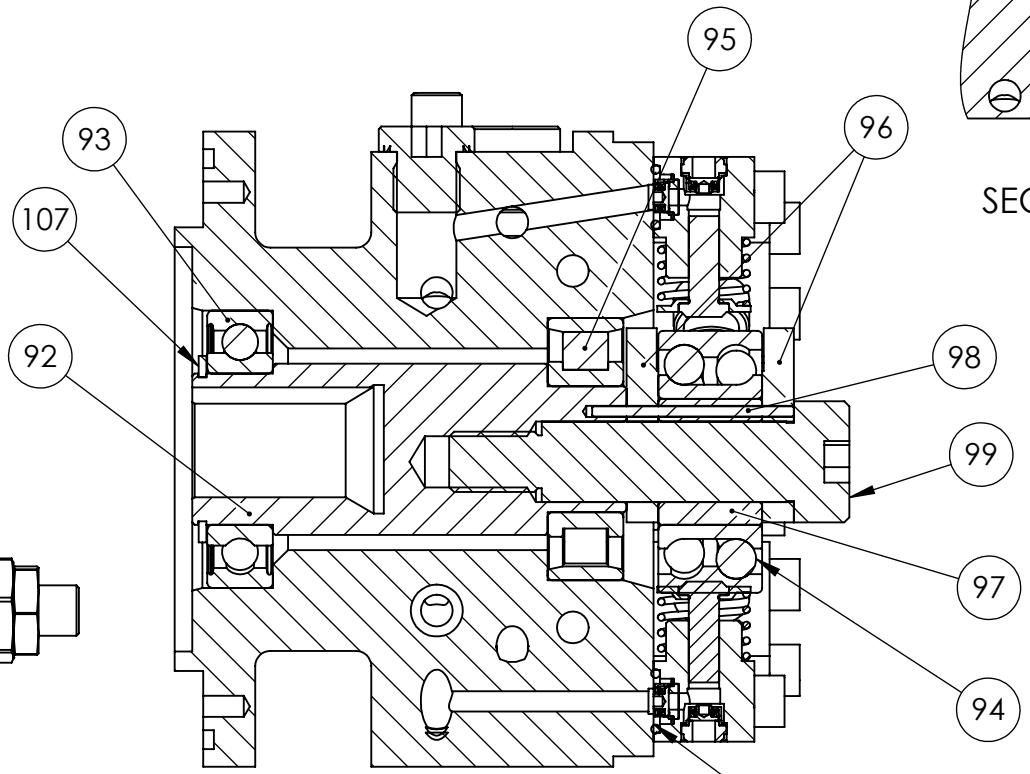

SECTION A-A

O-RING INCLUDED IN
SEAL KIT TPATP1-K

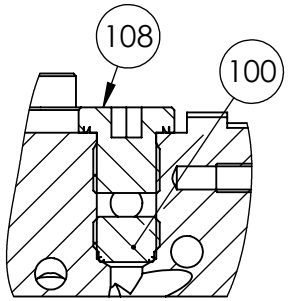

SECTION B-B

REVISION	
1	4753
2	5212
3	5597
4	6329
5	
6	
7	
8	
9	
10	
11	
12	
13	
14	
15	
16	
17	
18	
19	
20	

IMPORTANT

WHEN ORDERING SPARES YOU MUST STATE THE FULL PART NUMBER AND THE PRODUCT SERIAL NUMBER - FROM THE LABEL
TO PROTECT YOUR WARRANTY ALWAYS USE GENUINE HI-FORCE PARTS.

www.hi-force.com

Hi-Force HYDRAULIC TOOLS

AIR PENDANT ASSEMBLY

SERIAL NUMBERS
FROM BG 0925

SPARE PARTS LIST NO.
TPA07D EVD

REVISION	
1	4753
2	5212
3	5597
4	6329
5	
6	
7	
8	
9	
10	
11	
12	
13	
14	
15	
16	
17	
18	
19	
20	

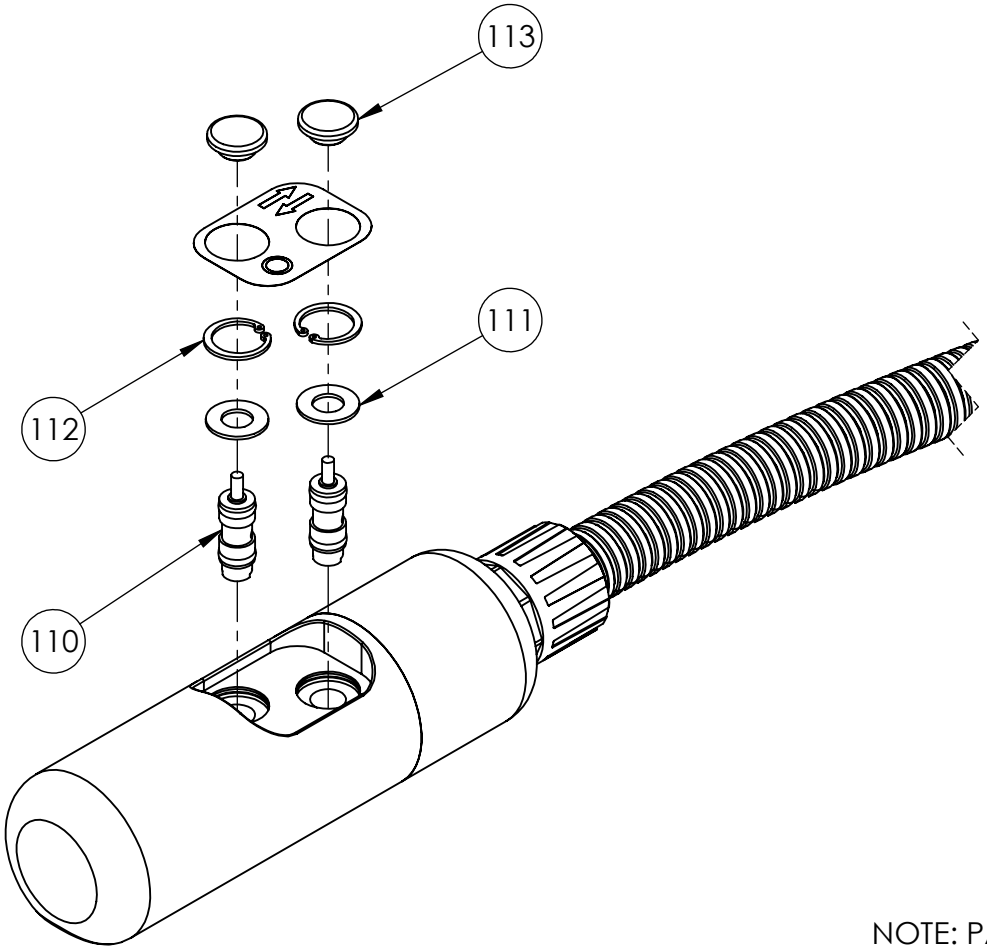

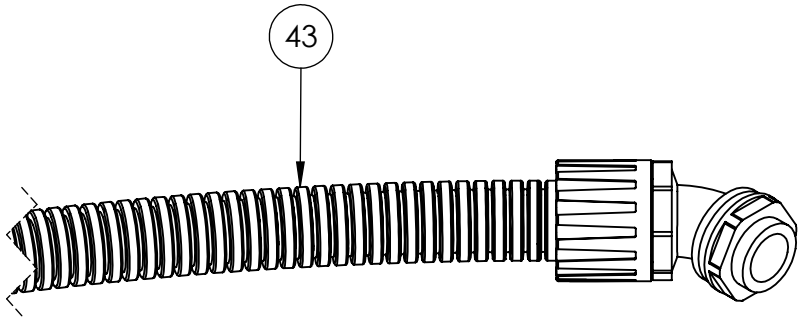

ITEM NO.	PART NUMBER	DESCRIPTION	QTY.
110	VFC000CH001	CARTRIDGE VALVE	2
111	WAC008JB000	WASHER	2
112	STC017BA001	CIRCLIP	2
113	VFC000CK001	PUSH BUTTON	2

NOTE: PART NO. 43 REFERS TO AIR PENDANT ASSEMBLY AS A WHOLE

IMPORTANT

WHEN ORDERING SPARES YOU MUST STATE THE FULL PART NUMBER AND THE PRODUCT SERIAL NUMBER - FROM THE LABEL
TO PROTECT YOUR WARRANTY ALWAYS USE GENUINE HI-FORCE PARTS.